भारत सरकार
अन्तरिक्ष विभाग
सतीश धवन अंतरिक्ष केन्द्र
शार
श्रीहरिकोटा डा.घ.524124 आं.प्र. भारत
टेलिफोन:+91 8623 225023
फेक्स: +91 8623 225170

Government of India
Department of Space
Satish Dhawan Space Centre
SHAR
SRIHARIKOTA P.O. 524124, AP, INDIA
Telephone: +91 8623 225023
Fax: +91 8623 225170

GOVERNMENT OF INDIA :: DEPARTMENT OF SPACE
SATISH DHAWAN SPACE CENTER SHAR :: SRIHARIKOTA – 524 124
SRI POTTI SREERAMULU.NELLORE DISTRICT (A.P)

TENDER NOTICE NO. SDSC SHAR/HPS/PT/10/2015-16

On behalf of President of India, Head Purchase and Stores, SDSC SHAR, SRIHARIKOTA invites **on line quotations** for the following:

Sl No	Ref. No.	Description	Qty.	Tender Fee
01	SHAR SPP 2015 00 3131 e-procurement [Two Part basis]	Fabrication, Transportation, Erection & Commissioning of Working Platform	1 No.	No Tender fee shall be applicable for tenders submitted through EGPS
02	SHAR SP 2015 00 3140 e-procurement [Two Part basis]	Fabrication, Testing, Supply & Alignment with Mixer at SDSC SHAR of Jacketed Vessels (Bowls)	6 Nos.	
03	SHAR MH 2015 00 3249 e-procurement [Two part basis]	Fully Automated Biochemistry Analyzer	1 No.	
04	SHAR VAST 2015 00 3254 e-procurement [TWO part basis]	Material Procurement, Fabrication, Supply, Erection & Commissioning of FCVRP Replaceable parts of SSAB at SDSC SHAR, Sriharikota	1 Lot	
05	SHAR CMD 2015 00 3258 e-procurement [SINGLE part basis]	Supply & Fixing of RO & Water Coolers at SDSC SHAR, Sriharikota	1 LS	

Last Date for downloading of tender documents : 28.12.2015 at 16:00 hrs.
Due Date for submission of bids online : 28.12.2015 at 16:00 hrs.
Due Date for Bid Sealing on : 28.12.2015 at 16:01 hrs. to 28.12.2015 at 17.30 hrs.
Due Date for Open Authorization : 28.12.2015 at 17.31 hrs. to 30.12.2015 at 17:00 hrs.
Due Date for opening of tenders : 31.12.2015 at 14:30 hrs.

Instructions to Tenderers:

01. For full details/scope of work and terms and conditions etc., please see the enclosed annexures.

02. Interested tenderers can download the e-tender from ISRO e-procurement website https://eprocure.isro.gov.in and submit the offer on line in the e-procurement portal. Offers sent physically by post/courier/in person will not be considered.

03. Tender documents are also available on ISRO website **www.isro.org; ISRO** e-procurement website **https://eprocure.isro.gov.in** and SDSC SHAR, Sriharikota website **www.shar.gov.in.** The same can be down loaded and offer submitted on line in the e-procurement portal.

04. Quotations received after the due date/time will not be considered.

05. The tender documents are available for download upto **28.12.2015 at 1600 hrs** and **last date for submission of tenders on line 28.12.2015 at 1600 hrs. and Tender Opening on 31.12.2015 at 14:30 hrs.**

06. Head, Purchase and Stores, SDSC-SHAR, Sriharikota reserves the right to accept or reject any/or all the quotations.

DT: 09.11.2015 HEAD, PURCHASE AND STORES

Tender Document for
Fabrication, transportation, erection and commissioning
of
Working Platform

Satish Dhawan Space Centre SHAR

Indian Space Research Organisation

Sriharikota

October 2015

Table of Contents

1. Scope of the tender 5
1.1. Introduction 5
2. General Terms and conditions 5
2.1. Instruction to bidders 5
2.2. Publicity Relating To Tenders 8
2.3. Site Visit 8
2.4. Validity of Offer 8
2.5. Cost of Bidding 9
2.6. Project Monitoring 9
2.7. Arbitration 9
2.8. Performance bank guarantee 10
2.9. Liquidated damage 11
2.10. Security deposit 11
2.11. Earnest Money Deposit 11
2.12. Force majeure 12
2.13. Guarantee 12
2.14. Payment Terms 12
2.15. Delivery 13
2.16. Packing & Forwarding 13
2.17. Exclusion of Tenders 13
2.18. Drawings 13
3. Documents Comprising the Bid 14
3.2. Part – I Technical and Un priced Commercial Part 15
3.3. Part – II Priced Commercial Bid 16
3.4. Bid Submission 16
3.5. Bid Evaluation 17
4. Equipment and services 17
4.1. To be provided by the vendor 17
4.2. To be provided by Department 19
5. Codes and Standards 20
6. General Description 21
6.1. Functional Requirement 21
6.2. General Specification related to fabrication 24
6.3. Loads acting on working platform 25
6.4. Requirement 25
6.5. Subsystems and assemblies 27
6.6. List of drawings 27
6.7. Main Beam and Truck assembly 30
6.8. Main Beam structure 30
6.9. Working platform trucks 31
6.10. Deck and stair case assembly 32
6.11. Upper deck (west) 32
6.12. Upper deck (East) 33

6.13. Upper deck plates and upper deck middle assembly 34
6.14. Stairs assembly 34
6.15. Lower Deck assembly 35
6.16. Drive Assembly 37
6.17. Wheel module assembly 38
6.18. Vacuum chamber Lid lifting assembly 39
6.19. Vacuum chamber Lid locking assembly 42
6.20. Drip collection tray 43
6.21. Powering of working platform 46
6.22. Working platform rails 46
6.23. Hydraulic System 48
6.24. Hand rails (SS 304) 54
6.25. Mounting of sensors/encoders 55
7. Thermal Stress Reliving 56
7.1. General instruction for stress reliving 56
8. Transportation 57
9. Handling and tilting of Working Platform 57
9.1. At SDSC SHAR 57
10. General Information 58
10.1. Erection and commissioning 58
10.2. Safety 59
10.3. Painting 59
11. Inspection and Testing 59
11.1. at Party's Site 60
11.2. Inspection and Testing after erection 60
12. Summary of Data to be Furnished by Party 60
12.1. Along With Technical Bid 60
12.2. Data to Be Furnished By Party after the Award of Tender 61
13. Major Milestones 62
14. List of suggested Vendors 62
15. List of Annexure 63

List of figures

Fig. 1. Working platform General arrangement with other sub systems 21
Fig. 2. Working platform General arrangement with Vacuum chamber lid 22
Fig. 3. Main beam and Truck assembly (graphical representation)..... 30
Fig. 4. Main beam structure (graphical representation) 31
Fig. 5. Working platform truck (RH)..... 31
Fig. 6. Working platform truck (LH) 31
Fig. 7. Upper deck (West) (graphical representation)..... 33
Fig. 8. Upper deck middle assembly (graphical representation) 34
Fig. 9. Stairs assembly 35
Fig. 10. Lower deck assembly..... 36
Fig. 11. Drive assembly..... 37
Fig. 12. Wheel module assembly 39
Fig. 13. Vacuum chamber lid lifting system 40
Fig. 14. Sectional view of Vacuum chamber lid lifting system 41
Fig. 15. Vacuum chamber lid locking system..... 43
Fig. 16. Drip collection assembly with Vacuum chamber lid..... 44
Fig. 17. Drip collection assembly..... 44
Fig. 18. Sectional view of Drip collection assembly..... 45
Fig. 19. End Stopper for Working Platform Rails..... 47
Fig. 20. End Stopper for Transfer Car Rails 47
Fig. 21. Hand rail – Typical configuration 55

List of tables

Table 1. Codes and Standards 20
Table 2. Working platform Drive system specifications 37
Table 3. List Of Hydraulic Hoses 49
Table 4. List of major Hydraulic Components..... 51
Table 5. Specification of RTD Sensors..... 53
Table 6. Specification of Level Switch 54
Table 7. List of components for Stress reliving..... 56

1. Scope of the tender

1.1. Introduction

1.1.1. SDSC SHAR is planning to realize a working platform of size approx. 10.4m X 10m.

1.1.2. The scope of work under this tender covers preparation of detailed fabrication drawing, manufacture, testing, inspection at manufacturer's work, sand blasting, painting, forwarding, transportation to place of erection, unloading, storing the materials till the time of erection, erection, load testing and commissioning at our site, carrying out performance testing required for commissioning of Working platform at Production Plant, SDSC SHAR.

1.1.3. Arrangements shall be made by the supplier for the inspection and testing during different stages of its manufacture starting from the raw materials till the completion of works by the SDSC SHAR at supplier's site as per the Quality Assurance Plan (QAP).

2. General Terms and conditions

2.1. Instruction to bidders

2.1.1. One set of tender document along with the drawings is issued. Bidder shall sign and stamp each page of tender as token of his acceptance & submit along with his offer. Document shall be scanned and uploaded in e-procurement portal. In case it is not possible to upload due to higher file size, hard copy of the balance documents **(without any price figures)** shall be submitted physically before due date.

2.1.2. Transfer of tender document issued to one Bidder to another is not permissible.

2.1.3. Tender documents shall remain the property of Department and if obtained by one intending Bidder shall not be utilised by another without the consent of the Department.

2.1.4. The proposal shall be completely filled in all respects and shall be submitted together with requisite information. Any offer incomplete in any particulars is liable for rejection.

2.1.5. Bidders shall set their quotations in firm figures and without qualifications or variations or additions in the terms of the Tender documents. Proposal containing qualifying expressions such as "subject to minimum acceptance" or "subject to prior sale" or any other qualifying expressions or incorporating terms and conditions at variance with the terms and conditions

incorporated in the Tender documents are liable to be rejected.

2.1.6. Cost quoted shall be firm and fixed.

2.1.7. Price shall be quoted in Indian National Rupee.

2.1.8. Successful Bidder shall submit project execution plan and work break down chart, detailing the methodology of execution (process plan) within 15 days from the date of issue of purchase order.

2.1.9. Bidder should award any part of the work under the scope of this tender to any sub vendor only after obtaining necessary approval from the department. Bidder shall submit relevant information as required by the department. Department has every right to accept or reject the proposal submitted. Approval of the department is no way relieves the bidder from his responsibility and the bidder is wholly responsible for execution of work as per the specifications, terms, and conditions mentioned in this document.

2.1.10. Bidder shall indicate clearly such of those works planned to offload to his sub-vendor.

2.1.11. The erection works at this facility requires that, the party (successful bidder) shall adhere to good daily housekeeping practices. During erection, the party shall keep all work and storage areas used by them free from accumulation of waste materials. Scrap shall be removed from the site to the satisfaction of the purchaser.

2.1.12. Satish Dhawan Space Centre – SHAR (SDSC-SHAR) Sriharikota is declared as prohibited place under official secrets act 1923. Hence during execution of site works necessary security requirements enforced by the department from time to time shall be followed strictly.

2.1.13. SDSC SHAR shall have the right of inspection and supervision of the manufacturing process adopted by the Supplier for the manufacture of equipment at various stages through their authorized representatives. In case the manufacturing process adopted is not found suitable and commensurate with the desired quality of the equipment, the Supplier will be advised to adopt the correct manufacturing process which will be binding on the Supplier. SDSC SHAR's decision regarding the quality of work and its acceptability shall be final and binding on the Supplier.

2.1.14. Defects in the material like fractures, cracks, blow holes, laminations, pitting, etc., are not allowed.

2.1.15. During the erection, testing and commissioning of Working platform at site in Sriharikota, the supplier has to make his own arrangements for boarding, lodging and transportation of his men and materials. However, subjected to availability, hostel accommodation may be provided by the Purchaser (SDSC SHAR) on chargeable basis.

2.1.16. Free electricity and water will be provided by the Purchaser (SDSC SHAR) for the erection, testing and commissioning works at the site. Bidder shall take into this while quoting the price.

2.1.17. Tools and tackles, other than those mentioned under free issue items, required shall be arranged by the party.

2.1.18. Before starting the site work (at SDSC SHAR), the party shall provide insurance as per workman compensation act to all his personnel working at site in Sriharikota against accidents. Till commissioning of Working Platform, the safe storing and handling of Working Platform is in the scope of supplier. Insurance for the same shall be borne by the party.

2.1.19. The transfer of title of Working Platform to the Purchaser (SDSC SHAR) will take place only after satisfactory erection, testing and commissioning of the Working Platform by the supplier and full acceptance by the Purchaser (SDSC SHAR).

2.1.20. Quote shall be based on F.O.R. Sriharikota.

2.1.21. All Taxes (like VAT, service tax etc.,) and duties applicable shall be indicated clearly in quotation.

2.1.22. Transportation & Transit Insurance are fully in the scope of supplier and the same shall be borne by the party.

2.1.23. **Excise Duty:** SDSC SHAR is eligible for Excise Duty Exemption under Notification No 64/95 date 16/03/1995 as amended by Notification No 15/2007 dated 01/03/07 and we shall provide necessary exemption certificate.

2.1.24. No claim for payment of Excise Duty or Cenvat reversal will be allowed later. The suppliers have to consider this into account while submitting quotations.

2.1.25. CST with effect from 01.04.2007, the facility of Inter State purchases by Government Departments against Form-D has been withdrawn. Now the rate of CST on the Inter-State sale to Government Departments shall be the rate of VAT/State sales Tax applicable in the State of the selling dealer. Accordingly the supplier has to clearly indicate the percentage the CST applicable against each case in their tenders.

2.1.26. **Customs Duty** SDSC SHAR is eligible for 100% Customs

Duty exemption as per Notification No 12/2012 dated 17.03.2012. This may be taken account while quoting for imported items. The list of imported items for which CD exemption will be provided is given below:-

1) Hydraulic Pump and hydraulic motors
2) All Hydraulic Cylinders
3) All hydraulic solenoid control Valves

2.1.27. Necessary care shall be taken during erection and commissioning of Platform at our site. Any damage to the property of Department shall be adequately compensated by the Party.

2.2. Publicity Relating To Tenders

2.2.1. Advertisements, press release or other specialized publicity documents, which are related to or reveal the existence of a tender and are intended by the Bidder for public distribution and/or the press, broadcasting, or television, shall be cleared/approved by the Department.

2.2.2. The Department may direct the Bidder to withhold such publicity or to require modifications to the publicity material. The Bidder shall comply with such direction.

2.3. Site Visit

2.3.1. Bidders visit and examine the site and its surrounding to familiarize them self of the existing facilities and environment and may collect all other information which he may require for preparing and submitting the Bid and entering into the tender if required. Bidders shall visit within 15 days from the date of tender enquiry.

2.3.2. Claims and objections due to ignorance of existing conditions or inadequacy of information will not be considered after submission of the Bid and during implementation.

2.4. Validity of Offer

2.4.1. Bid shall remain valid for acceptance for a **period of six months** from the due date of submission of the Bid.

2.4.2. The Bidder shall not be entitled during the said period to revoke or cancel his Bid or to vary the Bid except and to the extent required by Department in writing.

2.4.3. Bid shall be revalidated for extended period as required by Department in writing.

2.4.4. In such cases, unless otherwise specified, it is understood that

validity is sought and provided without varying either the quoted price or any other terms and conditions of Bid finalised till that time.

2.5. Cost of Bidding

2.5.1. All direct and indirect costs associated with the preparation and submission of Bid (including clarification meetings and site visit, if any), shall be to Bidder's account and the Department will in no case be responsible or liable for those costs, regardless of the conduct or outcome of the Bid process.

2.6. Project Monitoring

2.6.1. Bidder shall provide details of project team

2.6.2. Party shall submit the project status report every 15 days mentioning the status of various activities w.r.t. planned schedule for realization of working platform.

2.6.3. Party shall depute their Project team/ engineers for Monthly meeting to review the status and discuss/ resolve minor issues related to project execution at SDSC SHAR/ party's site based on mutual agreement on mutually agreeable dates.

2.7. Arbitration

2.7.1. In the event of any question, dispute of difference arising under these conditions or any conditions contained in the Purchase Order, (except as to any matters the decision of which is specially provided for by these conditions) the same shall be referred to the sole arbitration of the Director SDSC SHAR Office or some other person appointed by him, it will be no objection that the arbitrator is a Government Servant that he had to deal with matter to which the contract relates or that in the course of his duties as Government Servant he had expressed views on all or any of the matters in disputes or difference. The award of the arbitrator shall be final and binding on the parties of this contract.

2.7.2. If the arbitrator be the head of the purchase office.

(a) In the event of his being transferred or vacating his office by resignation or otherwise, it shall be lawful for his successor-in office either to proceed with the reference himself, or to appoint another person as arbitrator, or.

(b) In the event of his being unwilling or unable to act for any reason, it shall be lawful for the Head of the Purchase Office to appoint another person as

arbitrator: or

2.7.3. If the arbitrator be a person appointed by the Head of the Purchase Office in the event of his dying, neglecting or refusing to act, or resigning or being unable to act, for any reason, it shall be lawful for the Head of the Purchase Office either to proceed with the reference himself or to appoint another personas arbitrator in place of the outgoing arbitrator.

2.7.4. Subject as aforesaid, the Indian Arbitration and Conciliation Act, 1996 and the rules there under and any statutory modifications thereof for the time being in force shall be deemed to apply to the arbitration proceedings under this Clause. The arbitrator shall have the power to the extent with the consent of the Purchaser and the Contractor the time making and publishing the award.

2.7.5. The venue of arbitration shall be place as the purchaser in his absolute discretion may determine. Work under the purchase order shall, if reasonably possible, continue during arbitration Proceedings.

2.7.6. In case order is concluded on the public Sector Undertakings, the following Arbitration Clause will be applicable.

(a) In the event of any dispute or differences relating to the interpretation and application of the provisions of contracts, such dispute or difference shall be referred by either party to the Arbitration of one of the Arbitrator in the Department of Public Enterprises to be nominated by the Secretary to the Government of India in-charge of the Bureau of Public Enterprises.

(b) The Indian Arbitration and Conciliation Act, 1996 shall not be applicable to the Arbitration under this clause.

(c) The award of the arbitrator shall be binding upon the parties to the dispute provided; however, any party aggrieved by such award may make a further reference for setting aside or revision of the award to the Law Secretary, Department of Legal Affairs, Ministry of Law & Justice, Government of India. Upon such Additional Secretary when so authorised by the Law Secretary whose decision shall bind the parties finally and conclusively.

(d) The parties to the dispute will share equally the cost of arbitration as intimated by the arbitrator.

2.8. Performance bank guarantee

2.8.1. PBG at 10% of the value of the Purchase Order shall be submitted through bank guarantee from any of the Scheduled Banks executed on non-judicial stamp paper of appropriate value, and shall be valid for a period of sixty days beyond the date for completion of warranty period.

2.9. Liquidated damage

2.9.1. Time is the essence of this order. If the supplier's defined scope of work is not made by the end of delivery period, liquidated damage will be levied @ 0.5 % per week or part thereof subject to a maximum of 10% of value of undelivered stores.

2.10. Security deposit

2.10.1. Party shall submit security deposit, within 15 days from the date of order placement, for 10% of the total order value. Security Deposit shall be obtained through Bank Guarantee or fixed deposit receipt from any of the Scheduled Banks executed on non-judicial stamp paper of appropriate value, and shall be valid for a period of sixty days beyond the date for completion of the Purchase Order.

2.10.2. In case the vendor fails to furnish the security deposit within the specified date or extended due date, the Purchase Order/Contract shall be cancelled, and the EMD, if any, made earlier shall be forfeited, and, in addition, appropriate penal action will be considered.

2.10.3. Central PSUs/PSEs/Autonomous Bodies/MSEs shall be exempted from the payment of Security Deposit, and instead, an Indemnity Bond shall be submitted by them in lieu of the Security Deposit.

2.11. Earnest Money Deposit

2.11.1. Party shall submit EMD of Rs. 5.0 Lakh. EMD shall be submitted in a single installment through Demand Draft/Banker's Cheque/Fixed Deposit Receipts or Bank Guarantee from any of the Scheduled Banks executed on non-judicial stamp paper of appropriate value.

2.11.2. Central PSUs/PSEs/Autonomous Bodies, Micro and Small Enterprises, KVIC, National Small Industries Corporation, etc., will be exempt from the payment of EMD.

2.11.3. Parties who are registered (registered and empanelled) with Satish Dhawan Space Centre e-procurement portal are also exempted from the payment of EMD.

2.11.4. In case of bank guarantee, it shall be valid for a period of 45

days beyond the final tender validity date.

2.11.5. Any tender not accompanied with EMD shall be treated as invalid tender and rejected. Vendors seeking exemption from payment of EMD shall submit necessary proof like registration number, etc.

2.11.6. EMD of a vendor shall be forfeited if the tenderer/Contractor withdraws or amends his tender or deviates from the tender in any respect within the period of validity of the tender.

2.11.7. Failure to furnish security deposit/performance bond by a successful vendor within the specified period shall also result in forfeiture of EMD.

2.11.8. EMD shall be refunded to all the unsuccessful vendors within thirty days after placement of the Purchase Order.

2.11.9. EMD shall be refunded to the successful tenderer/Contractor after payment of the Security Deposit or may be adjusted against the Security Deposit.

2.11.10. EMD shall be refunded to all the participants in cases where the tender is cancelled or withdrawn by the Centre/Unit, within thirty days from the date of such cancellation or withdrawal.

2.12. Force majeure

2.12.1. Should a part or whole work covered under this agreement be delayed due to reasons of Force Majeure which shall include legal lockouts, strikes, riots, civil commotion, fire accident, quarantines, epidemic, acts of God and Government, fright embargoes, the completion period for work, plant or equipment referred to in this agreement be extended by a period not in excess of the duration of such Force Majeure. The occurrence shall be notified by either party within reasonable time.

2.13. Guarantee

2.13.1. The working platform shall be guaranteed against any manufacturing defects for a period of 12 months from the date of commissioning. For defects noticed during the guarantee period, replacement rectification should be arranged free of cost within a reasonable period of such notification.

2.14. Payment Terms

2.14.1. Our standard payment term is 100% within 30 days after acceptance at SDSC SHAR.

2.14.2. Wherever advance payment is requested, Bank Guarantee from any Nationalized Bank/Scheduled Bank should be furnished.

In case of advance payments, if the party is not supplying the material within the delivery schedule, interest will be levied as per the Bank Lending Rate plus 2% penal interest.

2.14.3. Interest will be loaded for advance payments/stage payments as per the lending rate of Bank and will be added to the landed cost for comparison purpose. In case of different milestone payments submitted by the parties, a standard and transparent methodology like NPV will be adopted for evaluating the offers.

2.15. Delivery

2.15.1. Delivery date is essence for this contract. Party shall adhere to the delivery date mentioned in this tender and same shall be confirmed along with the offer. In case Party is unable to meet the delivery schedule, the offer is liable for rejection.

2.15.2. The working platform shall be supplied to SDSC SHAR within **Six months** from the date of award of purchase order.

2.15.3. Erection and commissioning shall be completed within One month from the date of receipt at site.

2.15.4. Intermediate milestones as identified mutually after placement of order shall be met with.

2.16. Packing & Forwarding

2.16.1. The tenderer will be held responsible for the stores being sufficiently and properly packed for transport by rail, road, sea or air, to withstand transit hazards and ensure safe arrival at the destination. The packing and Marking of packages shall be done by and at the expenses of the Contractor.

2.17. Exclusion of Tenders

The following tenders shall be summarily rejected from the procurement process

2.17.1. Tenders of vendors who have been removed from the vendor list or banned/debarred from having business dealings.

2.17.2. The tenders which materially depart from the requirements specified in the tender document or which contain false information.

2.17.3. The tenders which are not accompanied by the prescribed Earnest Money Deposit.

2.18. Drawings

2.18.1. Each drawing submitted by the Bidder (after placement of Order) shall be clearly marked with the following details.

a) Name of the Owner: Satish Dhawan Space Centre, ISRO

b) Project Title : Working Platform for 2nd Casting Facility

c) Purchase Order No :

d) Title of the Drawing clearly identifying the system, equipment or part.

e) Drawing, Revision Number and Date.

f) Name of the Bidder:

In case of Sub-Vendor or Manufacturer's drawing, name of the Bidder and Sub-Vendor or Manufacturer shall be incorporated.

g) Drawings duly signed in "checked" and "approved" columns.

h) Scale to which the drawing is drawn.

i) Cross references to all relevant drawings.

j) All relevant notes to the drawing:

All notes necessary for understanding and execution of work shown on a drawing shall be presented on the same drawing.

k) All legends to all notations.

l) Details of revisions carried out

m) Bill of materials shall be tabulated, wherever required.

n) All titles, notings, markings and writings on the drawing shall be in English

o) All the dimensions shall be in metric units.

2.18.2. If standard catalogues are submitted, the applicable items shall be highlighted therein.

2.18.3. The drawings shall indicate all dimensions and details of equipment, materials of construction etc.

2.18.4. For all revisions of the drawing, Bidder shall ensure that all revisions are clearly encircled with revision numbers marked on the drawing.

2.18.5. Bidder shall also ensure that general details of revisions are indicated for each revision in the revision block of the drawing along with the date and signed by the approving authority.

3. Documents Comprising the Bid

This is e-procurement tender. All the documents need to be scanned and attached to the bid under "documents solicited from Vendor" form. In

case it is not possible to upload due to higher file size, hard copy of the balance documents **(without any price figures)** shall be submitted physically before due date.

3.1.1. Offers shall be sent online only using standard digital signature certificate of class III with encryption / decryption. The tenders authorized online on or before the open authorization date and time only will be considered as valid tenders even though the bids are submitted online.

3.1.2. The tenderer must authorize bid opening within the time stipulated in the schedule by SDSC SHAR. Otherwise the online bid submitted will not be considered for evaluation.

On-line bids shall consist of the following:-

3.2. Part – I Technical and Un priced Commercial Part

3.2.1. Technical and un priced commercial part shall comprise the following documents/information. All the documents shall be scanned and uploaded in the ISRO e-procurement portal.

3.2.2. Submission of bid letter along with one set of tender document duly signed and stamped as token of acceptance. Scanned copy shall be uploaded in the ISRO e-procurement portal.

3.2.3. Power of attorney in favour of authorised signatory of the bid/ proposal documents.

3.2.4. Audited balance sheet including profit and loss account for last three financial years showing annual turnover.

3.2.5. Latest income tax clearance certificate.

3.2.6. Latest solvency certificate from a scheduled bank.

3.2.7. List of projects in hand & completed during last five financial year indicating the name of client with contact details.

3.2.8. Any other relevant document, bidder desires to submit.

3.2.9. Confirmation w.r.t bid qualification criteria as per Annexure-1.

3.2.10. Compliance statement as per Annexure-2.

3.2.11. Quality Assurance Plan as per Annexure-3. Party shall confirm the broad guidelines mentioned in QAP. However this is only indicative. Detailed QAP shall be submitted by the party after placement of order.

3.2.12. Deviations, if any, w.r.t technical and commercial terms & conditions shall be clearly brought out under deviation list Annexure-4. If deviations are not listed separately, it will be

presumed that you are adhering to all the specification and terms & conditions given in this document.

Note: All the above documents shall be uploaded in the ISRO e-procurement portal.

3.3. Part – II Priced Commercial Bid

Priced commercial bid shall contain schedule of prices and shall be filled in ISRO e-procurement portal. No deviations, terms and conditions, assumptions, discounts etc. shall be stipulated in price bid. Department will not take cognisance of any such statement and may at their discretion reject such bids.

3.4. Bid Submission

3.4.1. Bid shall be submitted in two parts

- Part -1 Techno-Commercial Part of the Bid
- Part-2 Price Part of the Bid

3.4.2. Offers should be submitted On-line using standard digital signature of class -3 with encryption/decryption options.

3.4.3. The tenders authorized online on or before the open authorization date and time will only be considered as valid tenders.

3.4.4. Prices shall be mentioned in the space/column provided in the ISRO e-procurement portal only for such purpose.

3.4.5. Physical copy of the bid will be accepted only in case if the file size is bigger and not possible to upload the same. In such case, the hard copy shall be submitted within due date. Documents received after due date will not be considered.

3.4.6. Prices quoted should be on the basis of F.O.R. Sriharikota.

3.4.7. The purchaser will not pay separately for transit insurance and same shall be included in the cost quoted by the Bidder.

3.4.8. All riks in transit shall be exclusively borne the contractor and t hepurchaser shall pay only for such items as are actually received in good condition in accordance with the purchase order.

3.4.9. Bids duly filled in by the Bidder should invariably be submitted as stipulated in the e-procurement portal.

3.4.10. Department may open Part – I of the bid on the due date of opening at convenience. Price Bid (Part-II) of the bid of the technically and commercially acceptable bids shall be opened at a later date.

3.4.11. Department reserves the right to reject any or all the Bids without assigning any reasons thereof.

3.5. Bid Evaluation

3.5.1. The bidder shall provide all the relevant data/information/details required for evaluating the bid technical and commercially in the specific formats enclosed with the tender. Apart from this, Bidder is free to add any other relevant information.

3.5.2. During evaluation, Department may request Bidder for any clarification on the bid/ additional documents/ information required. Bidder shall submit all clarifications/ additional documents/ information requested in original. If not submitted within the stipulated time department has right to reject such bids.

3.5.3. Techno-commercial discussion shall be arranged with Bidder, if needed. Bidder shall depute his authorised representatives for attending discussions.

3.5.4. The complete scope of work is defined in the Tender document. Only those Bidders who undertake total responsibility for the complete scope of work as defined in the Tender document only will be considered.

3.5.5. In case Bid does not fully comply with the requirement of Tender document and the bidder stipulates deviations to the clauses of the tender, which are unacceptable to the Department, the Bid will be rejected.

3.5.6. Performance of Bidder on similar nature of works executed/ under execution shall be taken into consideration before selecting the Bidder for opening his price bid.

3.5.7. The time schedule for completion is given in the Tender document. Bidder is required to confirm the completion period unconditionally.

3.5.8. Department shall not be obliged to furnish any information / clarification to unsuccessful bidder as regard non acceptance of their Bids.

3.5.9. Overall lowest offer will be considered for placement of Order.

4. Equipment and services

4.1. To be provided by the vendor

4.1.1. Detailed Manufacturing drawings and Assembly drawings

4.1.2. Quality assurance plan for manufacturing and testing w.r.t all

the systems/sub-systems

4.1.3. Quality records, history dockets, as built drawings and all documentation related to manufacturing, inspection, testing and erection

4.1.4. Manufacture, Supply, erection and commissioning, painting of the working platform systems

4.1.5. Power will be provided at Power Control Centre (PCC) located at a distance of 15m from HPP. Routing of Power cable for Working platform Hydraulic power pack (HPP) shall be carried out. Necessary cable will be provided by the Department at free of cost. However party shall use standard cable trays for routing of power cable from PCC to HPP Motor. Party shall carry out cable termination at both ends.

4.1.6. Hydraulic piping complete with fittings, flanges, strainers, supports, tanks, pumps, and any other necessary equipment required for testing, cleaning and flushing of the system.

4.1.7. Grouting of Power pack

4.1.8. First fill of oil, grease, lubricants as required during start-up and commissioning.

4.1.9. Auxiliary steel / structural steel for supporting the equipment, piping, cabling etc.

4.1.10. Steel plates required to level the EP provided for installation of rails.

4.1.11. Rail for movement of transfer cars at both ends. (Transfer cars are not in the scope of Party)

4.1.12. Integration of vacuum chamber lid with working platform. (Vacuum chamber lid is not in the scope of Party)

4.1.13. All anchor bolts / foundation bolts, nuts, washers and inserts for the erection of equipment, piping and ducting.

4.1.14. All hardware e.g. Nuts, bolts & gasket, anchor fasteners etc, including breaking and making of walls if required are included in the Bidder's scope. No separate claim shall be entertained, in this respect. Shell ensure ready availability of hardware in case of damage of some hardware during installation.

4.1.15. The details shown in the drawing shall be verified with actual site conditions and changes if any required shall be incorporated. It is advised to visit the site to understand the interfaces and take essential interface dimensions wherever equipment is having interface with civil structure realised by others.

4.1.16. Based on the actual site conditions, if required, the equipments shall be fabricated in modules so that they can be moved into the respective bay/room for installation.

4.1.17. Minor changes if any suggested shall be incorporated at no extra cost and design verification if any required shall be carried out.

4.1.18. Drawings for review and approval as mentioned in this tender

4.1.19. Operation and maintenance manuals

4.1.20. For standard bought out components whose details were furnished in the tender either in the form of catalogue/data sheet, the contractor shall strictly adhere to the respective makes only.

4.1.21. In case Bidder suggests any changes in the Make/vendor, same shall be supported with complete technical details including need for such changes proposed. Alternate make suggested by the Party shall be better than the make suggested in this tender document. Department has the right to accept or reject the changes in the suggested make/vendors list

4.1.22. Shop inspection and tests as per specifications in QAP and as mentioned in this section shall be arranged by the bidder to enable department personnel to inspect. Wherever not specified, the shop inspection tests shall be as per recent codes applicable.

4.1.23. The Party's scope of work shall include erection, testing, start up, commissioning, operational trials covered in this specification.

4.1.24. Any other system not indicated herein, but required to make the system complete shall be included and provided by the bidder at no extra cost unless otherwise specifically excluded as indicated.

4.2. To be provided by Department

The equipment and services will be made available by the Department:-

4.2.1. RC bracket with EP for mounting the rails for working platform. However, if any steel plates are required to level the EP to achieve the tolerance mentioned in this document, the same shall be provided by the contractor.

4.2.2. EP on floor of casting bay for fixing rails for movement of transfer car.

4.2.3. EPs on the RC walls, columns, beams, and grade slab and roof slab soffit for supporting piping, cabling, rails and equipment.

For providing supports at locations where EPs are not available, Bidder shall supply suitable EP and fix to columns, beams, RC Walls, roof slab using anchor fasteners after obtaining permission from Department. However, structural steel supports for piping and cabling shall be in the scope of the BIDDER.

4.2.4. EOT cranes for erection and commissioning at site.

4.2.5. Positioning of Vacuum chamber with pad plates for fixing of lower deck.

4.2.6. Free electricity and water required for erection at SDSC SHAR.

5. Codes and Standards

1) All equipment, systems and works covered under this specification shall comply with all currently applicable statutes, regulations, standards and safety codes in the locality where the equipment will be installed.

In particular, the latest editions of the following standards are applicable.

Table 1. Codes and Standards

(i)	Steel for general structural purposes	IS 2062
(ii)	Hydraulic system, cylinders, Hydraulic Motors, Hydraulic Direction Control Valves, Pumps, Filters etc	IS 13053 or other relevant standards for hydraulic power products
(iii)	Rolled sections and special sections	IS:808, IS:1161, IS:1173, IS:1252, IS:1730, IS:1731, IS:1732, IS:1863, IS:1864, IS:2314,

Other national standards established to be equivalent or superior to the codes and standards specified are also acceptable.

In the event of any conflict between the codes and standards referred to in the specification and the requirements of this specification, the more stringent of these requirements shall govern.

Unless indicated otherwise, all codes and standards referred to in this enquiry specification shall be understood to be the latest version on the date of offer made by the bidder.

6. General Description

6.1. Functional Requirement

Drawing No.	Title	Revision
626-102-00-001-A1-R0	Working platform assembly	R - 0

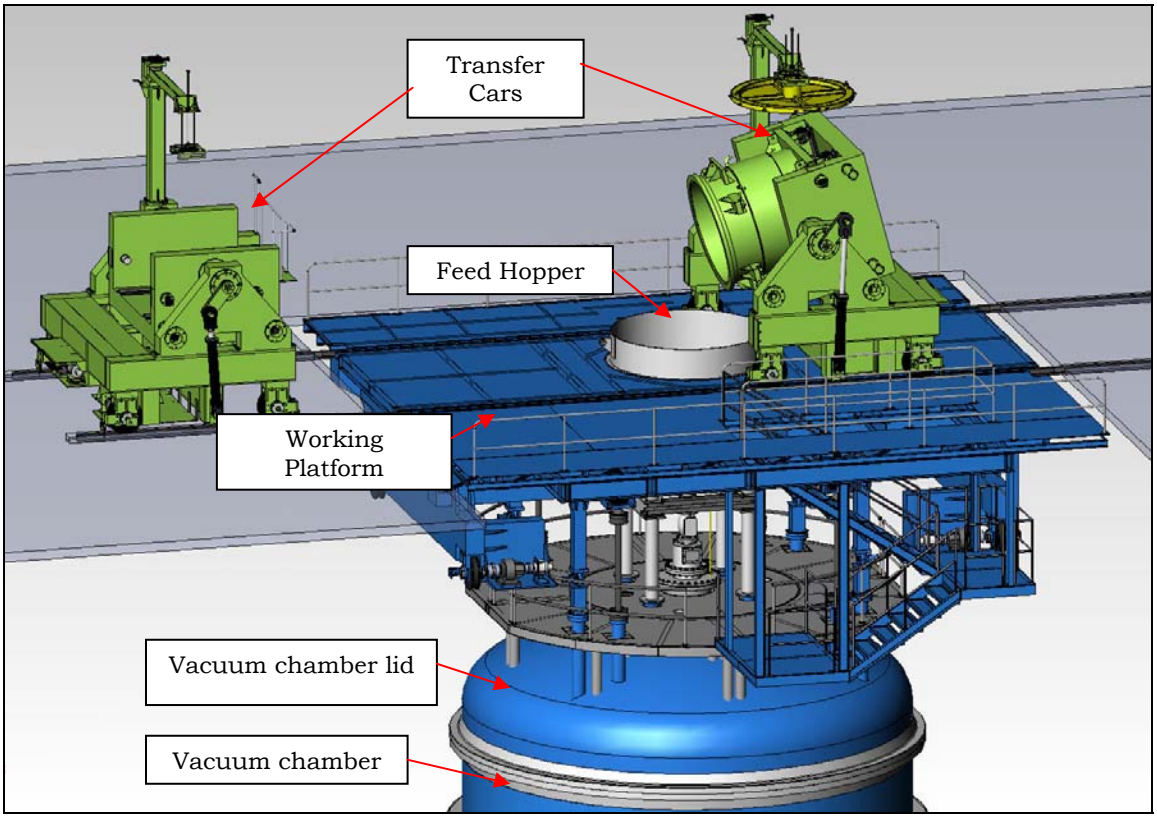

Fig. 1. Working platform General arrangement with other sub systems

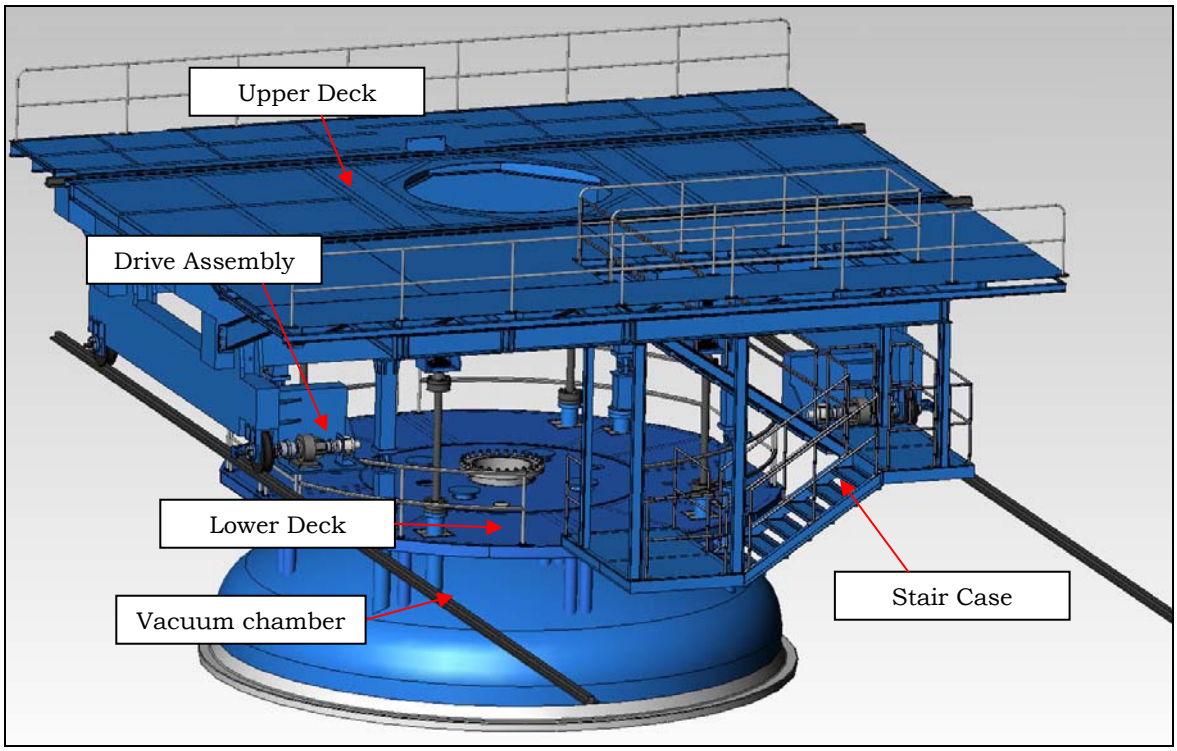

Fig. 2. Working platform General arrangement with Vacuum chamber lid

6.1.1. Working platform consist of upper deck, lower deck, staircase, lid lifting & lid locking systems, drive assembly, Drip collection assembly, rails and related hydraulic systems including power pack and piping.

6.1.2. It carries the vacuum chamber lid, feed system along with weighing system & hopper, two transfer cars, drip collection assembly, feed system along with Hydraulic Power Control Unit for vacuum chamber lid lifting system and all other sub systems required to convey power and data to and from the control room/panel room for the mechanisms. Thus it acts as the platform carrying all sub-systems on it. It draws power from the Service room.

6.1.3. It shall hold the vacuum chamber lid when lifted up from the vacuum chamber and shall carry to the Casting pit area.

6.1.4. It shall carry the two transfer cars on it when it moves to the machine pit area.

6.1.5. It has 4 nos. of hydraulic cylinders, which will lift the vacuum chamber lid. Lid is locked in lifted position using lock pin (manual).

6.1.6. It shall raise/lower the Vacuum chamber lid using hydraulic

cylinders and lid shall be mechanically locked in lifted position. Vacuum chamber lid shall be raised to approx of 500mm from Chamber flange.

6.1.7. Vacuum chamber shall be locked/unlocked in the lifted position by manually operated lid locking system. Lid lock shall provide positive mechanical lock to ensure that the vacuum chamber lid is in raised position while the working platform movement is carried out.

6.1.8. Vacuum chamber lid in lowered condition shall be seated on Vacuum chamber flange with cylinder in fully extended condition with self weight only. Dumb bell shaft shall be free when the lid is lowered and seated on vacuum chamber flange. Lid lifting dumbbell shafts shall not apply any compressive load on the lid in lower condition. The same will be verified during erection of working platform.

6.1.9. It shall have locking arrangement for the vacuum chamber lid at raised position. Lid locking system shall be carried out manually and feed back shall be available in control room and LPBS.

6.1.10. Rails shall be embedded in ground slab for movement of transfer car between parking position and position on working platform. The top of the rails shall be in flush with FFL. The rails provided on top of working platform for Transfer car movement shall be at same level with the rails provided on the floor. Free movement of transfer car with out any jerk at the joint area shall be ensured.

6.1.11. Necessary EP will be provided for fixing of rails. However Party shall provide shim plates required for leveling of rails. Wherever required, full length of rails shall be supported by shim plates for better load distribution. Shim plates at localized places are not acceptable.

6.1.12. Working platform and transfer car rails levelling and clamping shall be carried out by the vendor at site. Working platform rails shall be clamped to EP and Transfer car rails shall be welded to EP.

6.1.13. Working platform shall move to and fro from west (service room) location to the east (control room) carrying the vacuum chamber lid in raised position along with all the other systems loaded on the working platform.

6.1.14. It has two drive wheels and two idle wheels. Working platform along with Transfer cars, vacuum chamber lid and feed system moves forward and reverse by hydraulically operated motors.

Working platform moves on rails which are fixed on top of RCC girders.

6.1.15. Vacuum chamber lid and transfer cars are not in the scope of the bidder. However Party shall integrate vacuum chamber lid at site and demonstrate the functional checks like lid locking, lid lifting, to and fro movement of the working platform along with lid.

6.1.16. Vacuum chamber along with lid will be positioned inside the casting pit by others (Not in the scope).

6.1.17. The system is located in rectangular pit, which is hazardous area. However the power pack alone is located in Service room at a distance of about 50m, which is safe area.

6.1.18. Hydraulic manifold with all DC valves for lid lifting and to/fro movement of working platform shall be mounted on the working platform at suitable place.

6.1.19. All hydraulic components (solenoid operated direction control valves), which are mounted on working platform shall be suitable for Zone – I, Class- IIA/IIB, T4.

6.1.20. Suitable removal type Stainless Steel cover with swing doors shall be provided for Valve module located in Working platform.

6.1.21. In addition to solenoid operated DC valves, Lever operated DC valve shall be provided for lid lifting/lowering and working platform forward/reverse movement.

6.1.22. Drip collection tray is to be fitted to the vacuum chamber lid. Drip collection tray is to be rotated manually to bring it below or away from feed line. This system contains vacuum tight seals at the interface of vacuum chamber.

6.2. General Specification related to fabrication

6.2.1. All welds shall be ground.

6.2.2. 100% DP test for root and final weld pass shall be carried out.

6.2.3. 100% Ultrasonic test for plates of thickness above 20mm and as per QAP.

6.2.4. 100% Radiography test for all butt welds for plate thickness 20mm and above and as per QAP

6.2.5. The entire fabrication activity shall be performed in a planned / sequential manner to achieve desired dimensional/geometrical tolerance specified in the drawing or functional requirement mentioned in this document. It is suggested to add sufficient number of fixtures and tools to control the distortion during

welding process.

6.2.6. Dimensions shown in the drawing are final acceptance dimensions. Allowances for machining and thinning due to fabrication process shall be added to arrive at material sizes. Party is wholly responsible for realizing the finished product. Allowances mentioned in the drawing are indicative. Party shall study the requirement and provide proper machining allowances required based on the fabrication procedure adopted.

6.2.7. Dimensional tolerance wherever not specified shall follow the standard open dimension tolerances provided in the drawing.

6.2.8. Wherever welded attachments are used to facilitate fabrication, same shall be removed carefully by cutting or chipping and surface of material shall be finished smooth by grinding. As far as possible, hammering shall be avoided.

6.2.9. Edge preparation shall be carried out for all joints as mentioned in the drawing or as per standard fabrication procedure.

6.3. Loads acting on working platform

6.3.1. Working platform shall support Transfer Cars (2 nos) and Vacuum chamber lid (1 no).

6.3.2. Transfer car shall be supported on the rails provided on main girder. Weight of each Transfer car along with filled bowl will be about 33.5 ton.

6.3.3. Vacuum chamber lid shall be connected to working platform using dumbbell shaft arrangement. The vacuum chamber lid shall be locked in position using mechanical locks. Weight of the lid is about 20 ton.

6.3.4. Working platform shall also support feed system which includes weighing system, view glass, feed control valve, master hopper etc. Weight of the feed system will be about 15 ton.

6.3.5. Working platform shall also support lower deck (structural platform), part of working platform.

6.4. Requirement

6.4.1. Vacuum chamber lid in lifted/lowered condition shall be in horizontal plane within 1 mm.

6.4.2. During lifting the chamber lid shall be lifted uniformly within ± 3mm. Load compensating valves available in the hydraulic circuit shall be tuned to ensure the above requirement.

6.4.3. Main and creep Speed of travel for the working platform shall be

about 2.3 m/min and 0.5m/min. However provision shall be available to change the speed as per process requirement.

6.4.4. Center distance between two main beams shall be within ± 1 mm.

6.4.5. Center distance between Transfer car rails shall be within ± 0.5 mm.

6.4.6. Diagonal distance between Transfer car rails shall be within ± 1mm.

6.4.7. Center distance between working platform rail shall be within ± 0.5 mm.

6.4.8. Diagonal distance between Working Platform rails shall be within ± 1mm.

6.4.9. Working platform main rails shall be aligned with East-West direction in line with the civil structure.

6.4.10. Max level difference between top surface of Working platform main rails shall be within ± 1 mm.

6.4.11. EP provided on RCC girder for fixing of rails. Suitable shim plates shall be used for leveling of rails. Where ever required, shim plates shall be provided for full length. Localized height adjustment with shim plates is not acceptable.

6.4.12. All four wheels of the working platform shall be aligned properly to avoid any skew during forward/reverse movement.

6.4.13. All structures of mechanism shall be as per provisions of IS: 800

6.4.14. All the components in the Hydraulic system shall be rated for 250 bar. Working pressure is 100 bar.

6.4.15. Standard off-the-shelf hydraulic elements shall be used.

6.4.16. All Hydraulic cylinders shall be provided with cushion at both ends.

6.4.17. All hydraulic, electrical and other instruments that are located in hazardous area shall be suitable for use in flame proof environment i.e. Zone 1, Group IIA & IIB.

6.4.18. All the hydraulic motors shall be provided with built-in brakes (spring operated hydraulically release system).

6.4.19. All hydraulic cylinders shall have NBR rod and piston seals only. Hydraulic cylinders with PU seals will not be acceptable. Party shall take necessary care while importing/procuring these cylinders.

6.4.20. Suitable brackets shall be provided for fixing of proximity sensors for lid up/down location, fast forward/reverse and slow forward/reverse location.

6.4.21. Machined metal pieces (for sensing by proximity sensors) shall also be fixed at required locations.

6.4.22. Jigs and fixtures/templates required shall be used for precise location of interfaces.

6.5. Subsystems and assemblies

Working Platform system comprises following sub-systems & assemblies:

(a) Main Beam and Truck assembly
(b) Drive Assembly
(c) Wheel Module assembly
(d) Vacuum lid lifting system
(e) Vacuum Lid locking system
(f) Drip collection system
(g) Lower deck assembly
(h) Deck and Stair case assembly
(i) Hydraulic system
(j) Electrical and instrumentation systems
(k) Cable drag chain system
(l) Working platform rails

6.6. List of drawings

Sl. No.	Description	Drawing no.
1.	Working platform Assembly	626-102-00-001-A1-R0
2.	W. P. Drive assembly	626-102-01-001-A2-R0
3.	Flexible gear coupling Fenner size 4	626-102-01-002-A3-R0
4.	Flexible gear coupling Fenner size 2	626-102-01-003-A3-R0
5.	Drive mounting bracket (RH)	626-102-01-004-A2-R0
6.	Drive mounting bracket (LH)	626-102-01-005-A2-R0
7.	Hydraulic motor mounting bracket	626-102-01-006-A3-R0
8.	Main Beam and Truck Assy	626-102-02-001-A1-R0
9.	Main Beam Working Platform	626-102-02-002-A0-R0
10.	Working Platform Truck (RH)	626-102-02-003-A2-R0
11.	Working Platform Truck (LH)	626-102-02-004-A2-R0

Sl. No.	Description	Drawing no.
12.	Encoder Mounting Bracket (Wheel Module)	626-101-06-010-A3-R0
13.	Adapter for Encoder	626-101-06-011-A4-R0
14.	Shim	626-102-03-005-A4-R0
15.	Wheel Module Assembly	626-101-01-002-A1-R0
16.	Wheel	626-101-01-002-A3-R0
17.	Mounting bracket (fabrication)	626-101-01-003-A3-R0
18.	Mounting bracket (machined)	626-101-01-004-A3-R0
19.	Shaft	626-101-01-005-A3-R0
20.	End cap	626-101-01-006-A3-R0
21.	Spacer-A	626-101-01-007-A4-R0
22.	Key	626-101-01-008-A4-R0
23.	Spacer – B	626-101-01-009-A4-R0
24.	Spacer – C	626-101-01-010-A4-R0
25.	Deck and Stair Case Assy	626-103-00-001-A1-R0
26.	Stair Assembly	626-103-01-001-A0-R0
27.	Upper Deck West	626-103-01-002-A1-R0
28.	Stair Component	626-103-01-003-A1-R0
29.	Upper Deck East	626-103-02-001-A3-R0
30.	Upper Deck Plates and Middle	626-103-03-001-A2-R0
31.	C-Support	626-103-04-002-A2-R0
32.	Lower deck assembly	626-104-00-001-A1-R0
33.	Lower deck Support leg	626-104-00-002-A4-R0
34.	Structure Frame - A	626-104-00-007-A3-R0
35.	Structure Frame - B	626-104-00-08-A3-R0
36.	Structure Frame - C	626-104-00-009-A3-R0
37.	Structure Frame - D	626-104-00-010-A3-R0
38.	Chequered Plate Outer Lower Deck	626-104-00-011-A3-R0
39.	Cover Plate - A	626-104-00-012-A3-R0

Sl. No.	Description	Drawing no.
40.	Cover Plate - B	626-104-00-013-A3-R0
41.	Chequered Plate Inner Lower Deck	626-104-00-014-A3-R0
42.	Pin	626-104-00-015-A4-R0
43.	Lower deck Support leg	626-104-00-016-A4-R0
44.	Vacuum Lid Lifting Assembly	626-105-00-001-A2-R0
45.	Mounting Bracket	626-105-00-003-A3-R0
46.	Upper Cup - A	626-105-00-004-A4-R0
47.	Upper Cup - B	626-105-00-005-A4-R0
48.	Dumb bell shaft vacuum lid lifting (Machined)	626-105-00-006-A3-R0
49.	Dumb bell shaft vacuum lid lifting (Forged)	626-105-00-007-A3-R0
50.	Lower Cup - A	626-105-00-008-A4-R0
51.	Lower Cup - B	626-105-00-009-A4-R0
52.	Vacuum Lid Locking Assembly	626-106-00-001-A2-R0
53.	Upper Structure (Vacuum lid Locking)	626-106-00-003-A3-R0
54.	Lower Structure (Vacuum lid Locking)	626-106-00-004-A3-R0
55.	Lock Body	626-106-00-005-A3-R0
56.	Sensor Mounting Bracket	626-106-00-006-A4-R0
57.	Handle	626-106-00-007-A3-R0
58.	Drip collection assembly	626-107-00-001-A1-R0
59.	Tray	626-107-00-002-A3-R0
60.	Arm	626-107-00-003-A3-R0
61.	Shaft	626-107-00-004-A3-R0
62.	Bearing Housing	626-107-00-005-A3-R0
63.	Stopper	626-107-00-006-A3-R0
64.	Lever	626-107-00-007-A4-R0
65.	Seal Housing	626-107-00-008-A3-R0
66.	Bush	626-107-00-009-A4-R0

Sl. No.	Description	Drawing no.
67.	Spacer	626-107-00-010-A4-R0
68.	Seal cover	626-107-00-011-A4-R0

6.7. Main Beam and Truck assembly

Drawing No.	Title	Revision
626-102-02-001-A1-R0	Main Beam and Truck assembly	R - 0

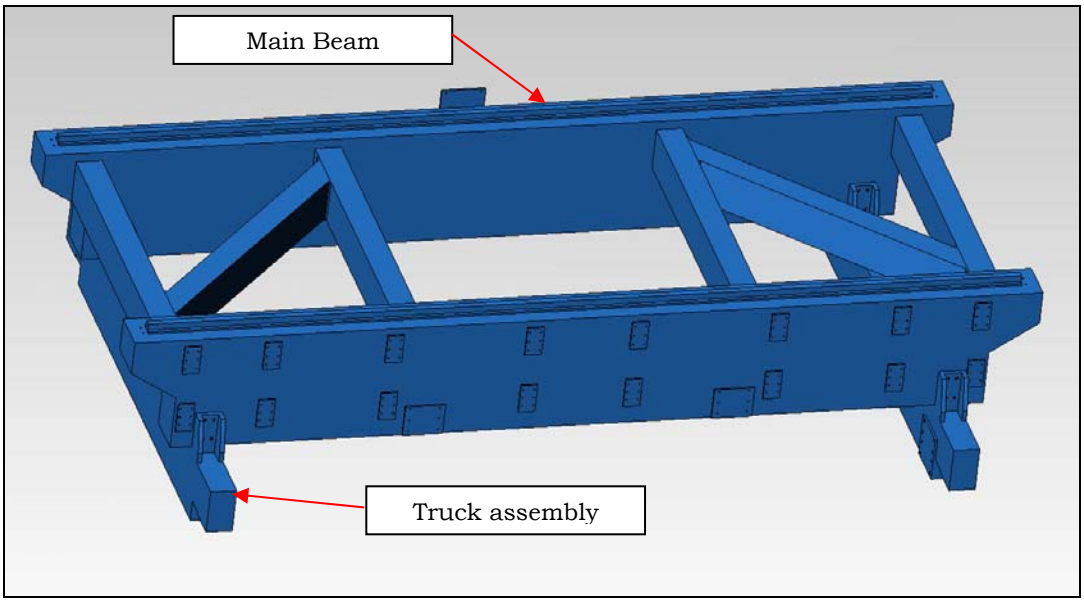

Fig. 3. Main beam and Truck assembly *(graphical representation)*

Typical model is shown above. For complete details, refer drawing.

The Working Platform comprises of the following assemblies:

(a) Main Beam structure

(b) Working Platform Trucks

6.8. Main Beam structure

Drawing No.	Title	Revision
626-102-02-002-A0-R0	Main Beam – Working Platform	R - 0

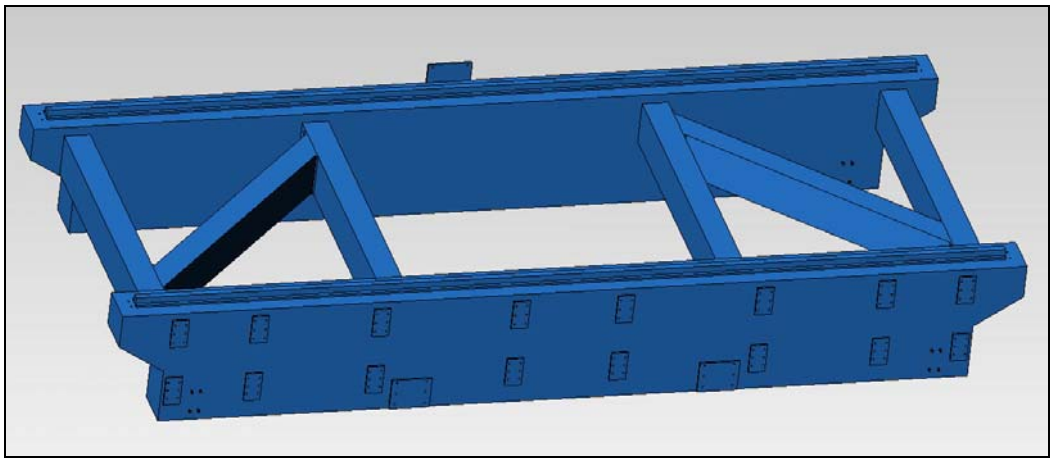

Fig. 4. Main beam structure *(graphical representation)*

6.8.1. On main beam assembly, Transfer car rails shall be mounted. Care shall be taken to ensure parallelism between the two beams.

6.8.2. Party shall fabricate suitable brackets and fix 4 nos. flameproof fans on the side of main beam assembly at site. Flame proof fans will be provided by the department. Powering of fans will be taken care by Department.

6.9. Working platform trucks

Drawing No.	Title	Revision
626-102-02-003-A2-R0	Working Platform Truck (RH)	R – 0
626-102-02-004-A2-R0	Working Platform Truck (LH)	R – 0

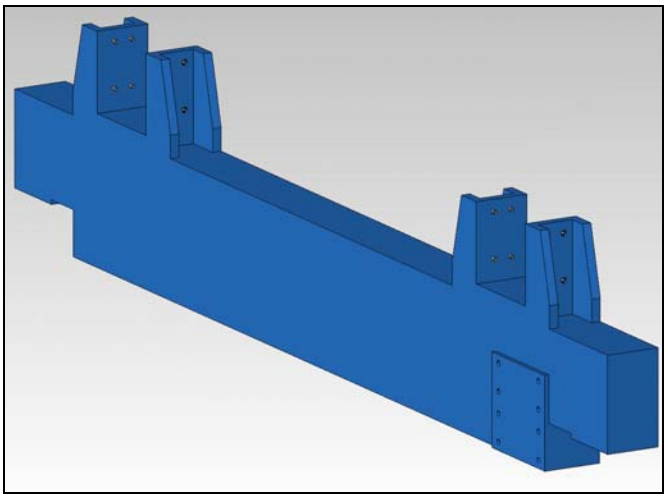

Fig. 5. Working platform truck (RH)

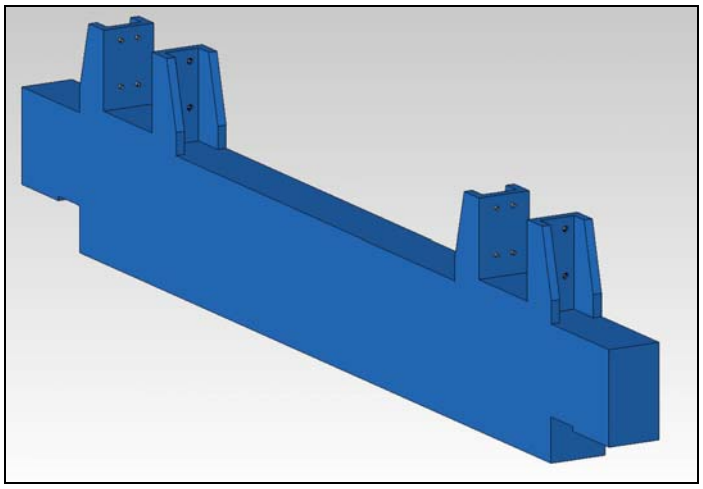

Fig. 6. Working platform truck (LH)

6.9.1. The working platform truck shall be formed by a fabricated beam.

6.9.2. The working platform truck shall have a seat for assembly of beams of the Main beam structure.

6.9.3. Working platform shall be assembled to truck frame using fasteners at Party's Site to carry out pre-delivery inspection.

6.9.4. Shim plates where ever required shall be used for proper alignment.

6.9.5. Working platform shall be assembled to truck frame using fasteners and welded at SDSC SHAR after completion of testing and qualification.

6.10. Deck and stair case assembly

Drawing No.	Title	Revision
626-103-00-001-A1-R0	Deck and stair case assembly	R0

6.10.1. The Deck and stair case assembly shall comprise of the following sub assemblies:

(a) Upper deck east,

(b) Upper deck west,

(c) Upper deck plates and upper deck middle,

(d) Stairs assembly

6.10.2. The upper deck assembly (east and west) shall be assembled using fasteners with the working platform during trials at Party's Site.

6.10.3. The upper deck assembly (east and west) shall be assembled using fasteners and welded with the working platform structure at SDSC SHAR after completion of testing and qualification.

6.11. Upper deck (west)

Drawing No.	Title	Revision
626-103-01-002-A1-R0	Upper deck - West	R0

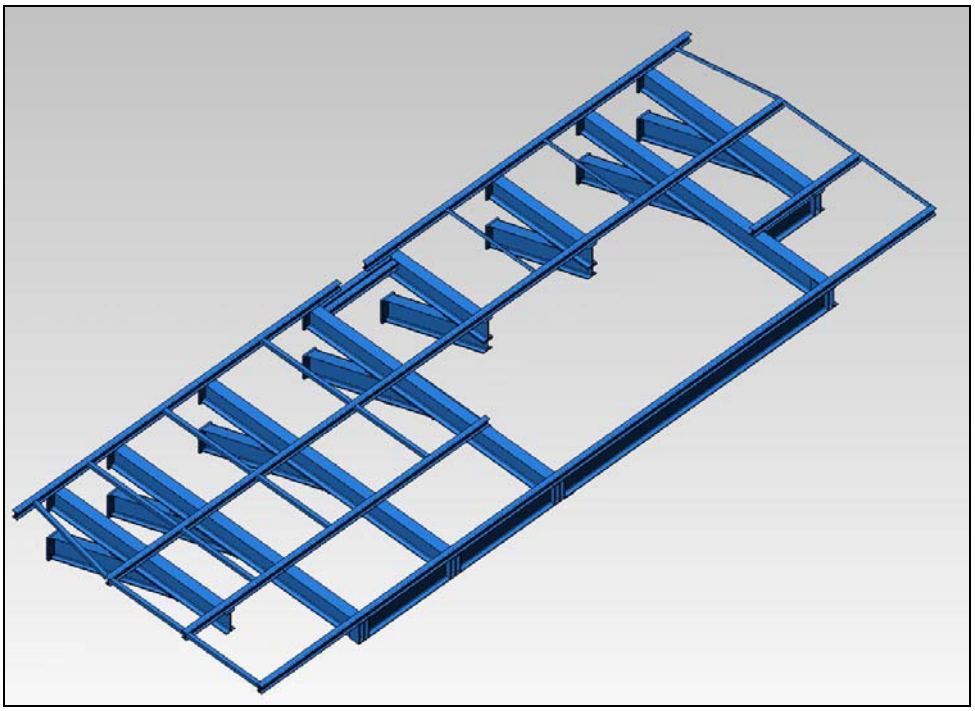

Fig. 7. Upper deck (West) *(graphical representation)*

6.11.1. The Upper Deck West shall be made from rolled steel I beams and plates.

6.11.2. The main members and support members shall be attached to the working platform.

6.11.3. Pads for the main members and support members shall be provided and shall be attached to the Main beam structure by fasteners.

6.11.4. Proper alignment and leveling of the upper deck (west) shall be ensured.

6.12. Upper deck (East)

Drawing No.	Title	Revision
626-103-02-001-A3-R0	Upper deck - East	R0

6.12.1. The Upper Deck (east) shall be made from rolled steel I beams and plates.

6.12.2. The main members and support members shall be attached to the working platform main beam structure.

6.12.3. Pads for the main members and support members shall be provided and shall be attached to the Working platform Main beam structure by fasteners.

6.12.4. Proper alignment and leveling of the upper deck (east) shall be

ensured.

6.12.5. Cover plate (10390 X 500 X min 3mm thick sheet) shall be provided on front side. Suitable supports shall be provided for the sheet.

6.13. Upper deck plates and upper deck middle assembly

Drawing No.	Title	Revision
626-103-03-001-A2-R0	Upper deck plates and Upper deck middle	R0

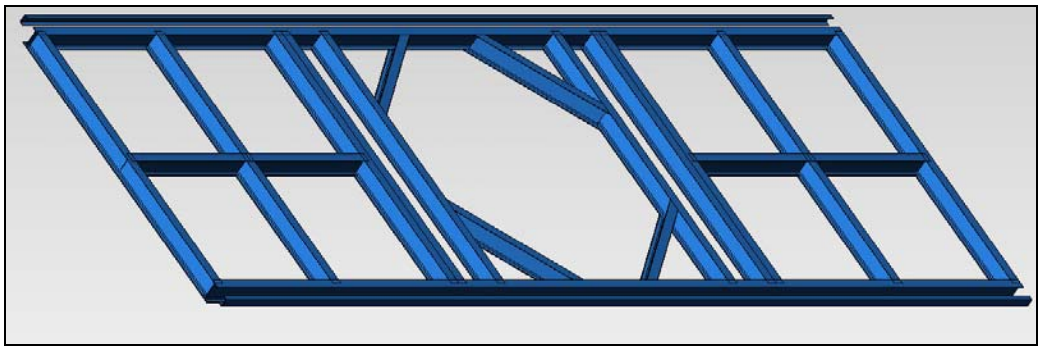

Fig. 8. Upper deck middle assembly *(graphical representation)*

6.13.1. Middle deck shall be made from an array of rolled steel I beams laid on the interconnecting and cross connecting members of the Working platform Main beam structure and shall be welded after ensuring alignment and level.

6.13.2. The deck plates shall be cut to shape from plain sheets of 8 mm thickness.

6.13.3. The deck plates shall be screwed on to the deck plate rails (rolled steel beams on top of the main members) by M8 screws.

6.13.4. Drilling and tapping shall be carried out at site.

6.13.5. Party shall fabricate suitable brackets and fix flameproof lights at the bottom of upper deck middle assembly. Flame proof lights will be provided by the department. Powering of light will be taken care by Department.

6.14. Stairs assembly

Drawing No.	Title	Revision
626-103-01-001-A1-R0	Stairs assembly	R0

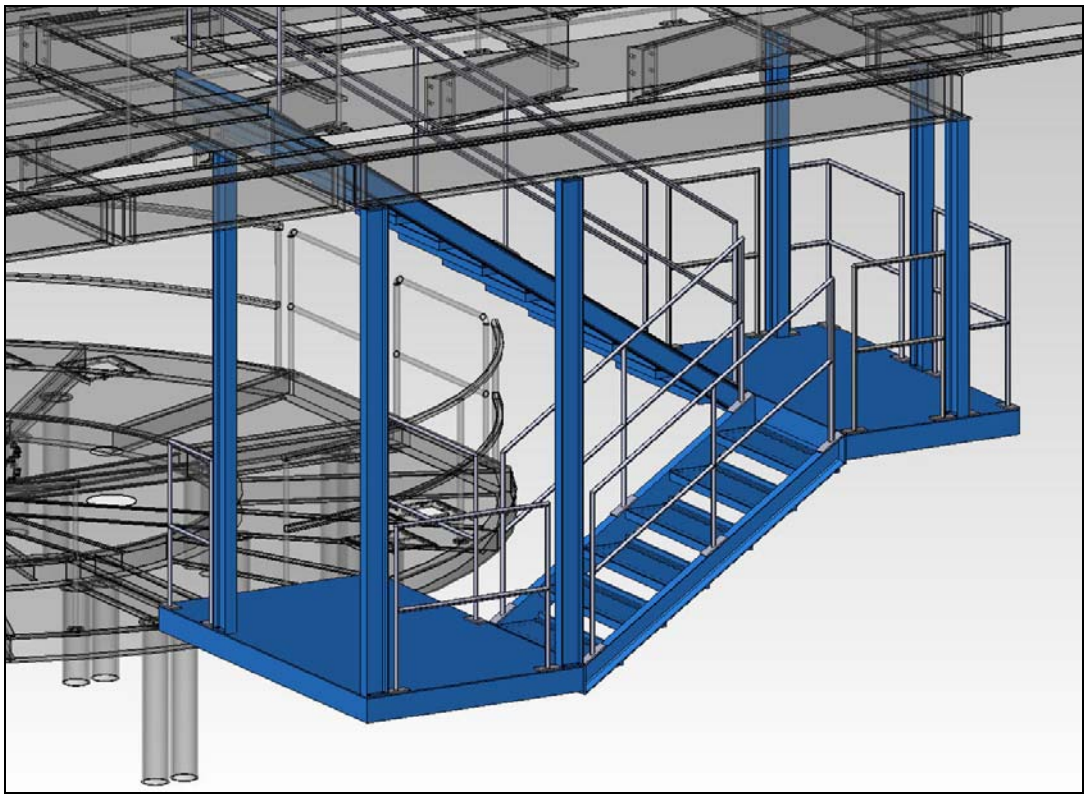

Fig. 9. Stairs assembly

6.14.1. Stairs Assembly shall comprise of the following:

(a) Upper Stair
(b) Upper Landing
(c) Middle Stair
(d) Middle Landing
(e) Railing for Stairs
(f) Hangers (rolled steel I beams with modified ends) for Stairs and Landings

6.15. Lower Deck assembly

Drawing No.	Title	Revision
626-104-00-001-A1-R0	Lower deck assembly	R0

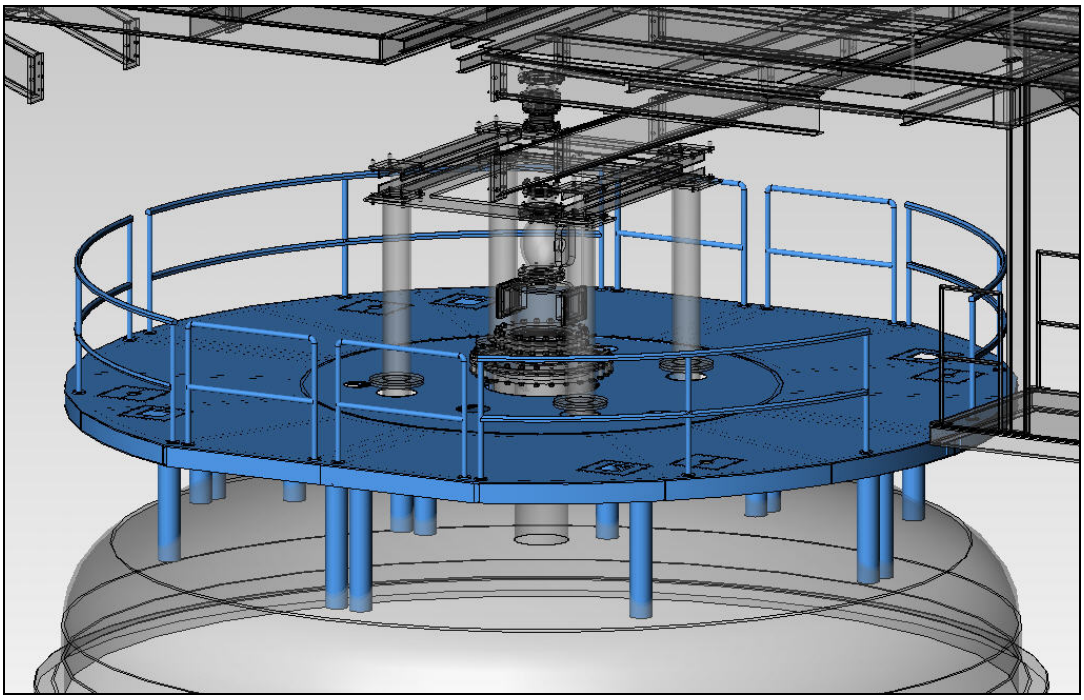

Fig. 10. Lower deck assembly

6.15.1. Lower deck shall be fabricated in sections and final welding shall be carried out at site after erection of working platform.

6.15.2. The lower deck comprises a set of legs which shall be welded to the vacuum chamber lid at the identified locations. Weld pads are provided on top of chamber lid.

6.15.3. SS Hand rail with toe guard shall be provided all round the lower deck. Suitable opening shall be provided at 4 locations and opening shall be closed by SS flexible chain links. SS ladders shall be provided from these 4 locations to reach the vacuum chamber lid. (Refer hand rails section for further details)

6.15.4. Suitable cut-out with removable type covers shall be provided for accessing the various nozzles and fittings provided on the vacuum chamber. Sizes of various components will be provided by the Department. Party shall work out cut out and mounting details.

6.15.5. Lower deck houses items like cameras, flame proof lights and drip collection trey. These items will be provided (free of cost) during erection. Suitable brackets and cut-outs shall be provided for fixing these items by the party. Powering of these items will be taken care by the department.

6.15.6. Top chequered plate shall be made in sectors and shall be fitted to lower deck frame using countersunk screws.

6.16. Drive Assembly

Drawing No.	Title	Revision
626-102-01-001-A2-R0	Drive assembly	R - 0

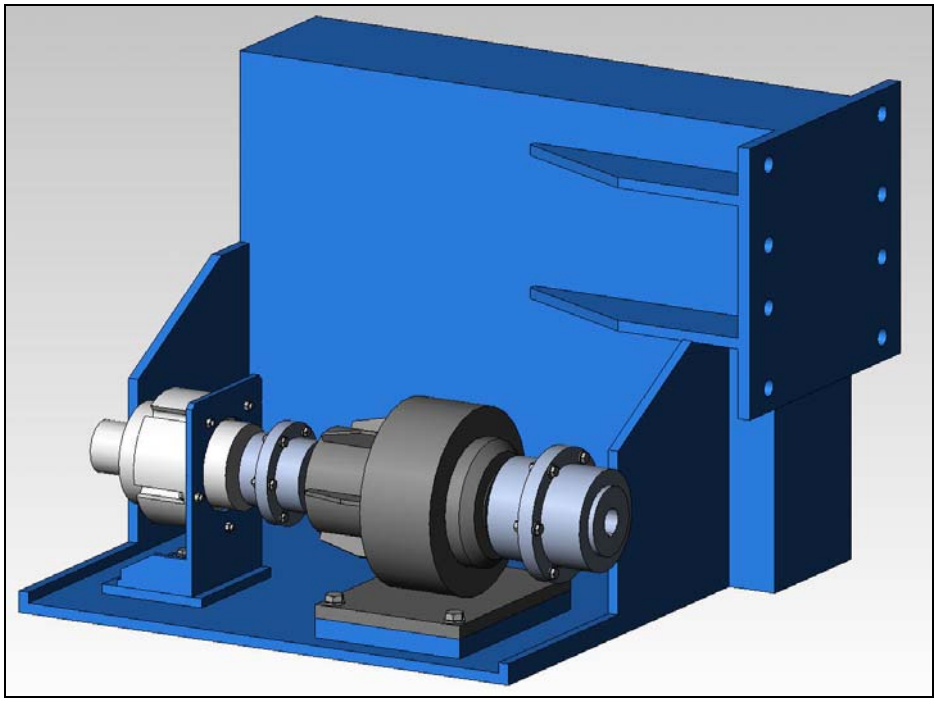

Fig. 11. Drive assembly

6.16.1. Drive assembly consists of hydraulic motor, gear box and couplings.

6.16.2. Pad plates (for mounting of hydraulic motor and gear box) shall be machined after fabrication. Interchangeability shall be ensured.

6.16.3. Details of the hydraulic drive module are given below -.

Table 2. Working platform Drive system specifications

Torque at Wheel	5000 Nm
Speed of Wheel	4 RPM
Prime Mover	Hydraulic Motor
Hydraulic Motor specifications:	
Type	Radial piston hydraulic Motor with built in brakes
Make	Parker Hydraulics Denison Calzoni Type MR
Model	MR 250 DN1N1C1NXX
Theoretical Specific Torque	4 Nm / bar
Maximum Working	250 bar

Pressure	
Torque	218.3 N-m
Speed	1-1800 RPM
Gear box specifications:	
Gearbox type	Planetary Reduction Gearbox
Make	Cyclo, Satara, India
Model	4007-2
Ratio	41.5:1
Peak Torque	11695 N-m
Coupling - 1 specifications:	
Type	Flexible gear
Make	Fenner
Model	Size – 4
Coupling - 2 specifications:	
Type	Flexible gear
Make	Fenner
Model	Size – 1

6.16.4. Hydraulic power unit placed shall be placed in the service room. Permanent hydraulic lines shall be routed from power pack to working platform. Flexible hoses of suitable length shall be provided in between to allow free to and fro movement of working platform. These hoses will be routed through a flexible drag chain. Drag chain will be provided by the Department.

6.16.5. The hydraulic motors shall be connected in parallel. The pressure differential for each motor is maintained by separate pressure regulating and controlling valves.

6.16.6. The output shaft of the hydraulic motor shall be connected to the respective reduction gear box by a Flexible gear coupling (Make: Fenner) having intermediate coupling piece meant for disconnection from the gear box without dismantling the drive assembly as shown in the drawing.

6.16.7. Machining of pad plates for hydraulic motor and gear box shall be carried out in single setting after completion of fabrication. Care shall be taken to achieve the tolerances mentioned in the drawing.

6.17. Wheel module assembly

Drawing No.	Title	Revision
626-101-01-002-A1-R0	Wheel module assembly	R - 0

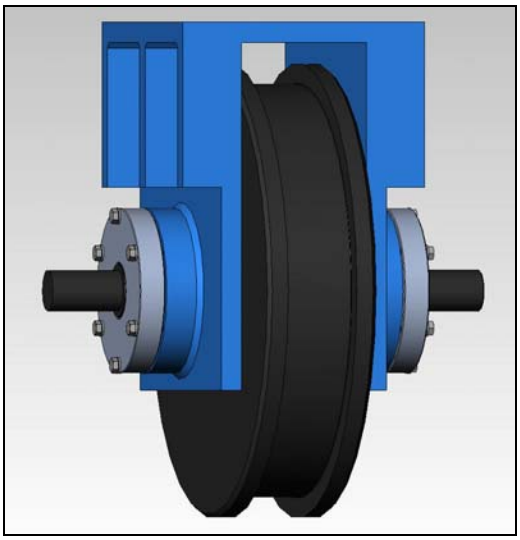

Fig. 12. Wheel module assembly

6.17.1. The working platform wheel module shall comprise a forged steel wheel, an alloy steel axle, antifriction spherical roller bearings, bearing caps, bearing spacer and housing as shown in the drawing.

6.17.2. The wheel module shall bear a load of about 30,000 kg (300,000 N)

6.17.3. The wheel shall be a standard double flanged crane wheel of 500 mm diameter; 85 mm tread width and 20 mm thick flanges.

6.17.4. Out of the four wheel modules provided for the working platform the two modules at the West end shall be of driving type.

6.17.5. The modules at the East end shall be used to obtain signals for speed and distance travelled by the working platform.

6.17.6. Boring on wheel bracket shall be carried out in single setting after completion of fabrication. Care shall be taken to achieve the tolerances mentioned in the drawing.

6.17.7. One extra set of wheel shaft, bearings, and couplings (size 1 & size 4) shall be provided as spares.

6.18. Vacuum chamber Lid lifting assembly

Drawing No.	Title	Revision
626-105-00-001-A2-R0	Vacuum Lid lifting assembly	R0

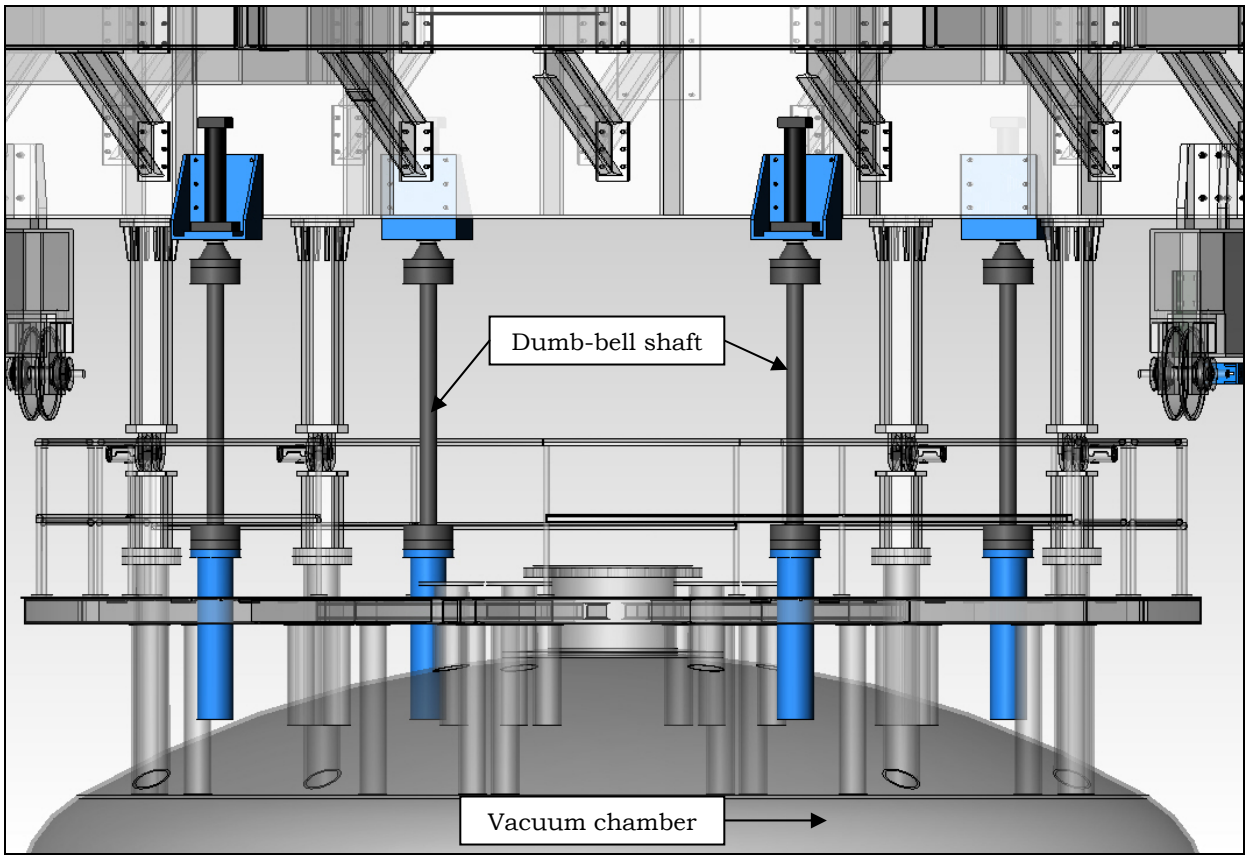

Fig. 13. Vacuum chamber lid lifting system

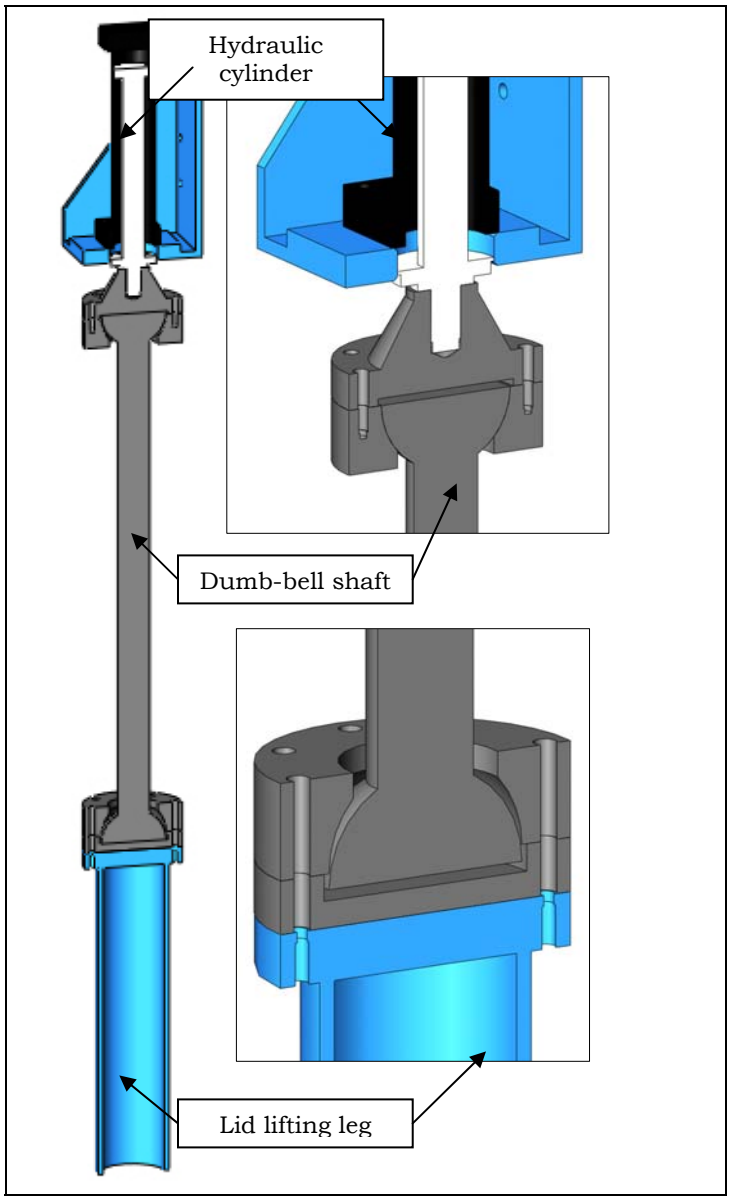

Fig. 14. Sectional view of Vacuum chamber lid lifting system

6.18.1. Vacuum lid lifting system shall comprise of four nos. of hydraulic lifting system assembled to the working platform.

6.18.2. Lid in lifted condition shall be locked using four nos. of mechanical locks.

6.18.3. The vacuum lid lifting system shall comprise of four identical lifting assemblies having lid fitting for attaching the lid lifting system to the vacuum lid, ball joints for flexibility and hydraulic cylinders with mounting brackets attached to the working platform.

6.18.4. Height of lift is about 500mm.

6.18.5. Uniform lid lifting shall be ensured by incorporating suitable load compensated valves.

6.18.6. Vacuum chamber lid with Vacuum Lid Lifting leg support will be provided by Department. Party shall ensure alignment of lid lifting support w.r.t. working platform structure and minor correction required shall be carried by the party at site.

6.18.7. Vacuum chamber lid lifting system comprises of the following components.

(a) Vacuum lid lifting leg support,
(b) Hydraulic cylinder,
(c) Mounting bracket,
(d) Upper cup – A,
(e) Upper cup – B,
(f) Dumb bell shaft for vacuum lid lifting,
(g) Lower cap – A and
(h) Lower cap – B

6.18.8. UT of shall Dumb bell shafts, Upper cup – A, Upper cup – B, Lower cap – A, Lower cap – B shall be carried out as per ASTM A 388/A 388M-05.

6.18.9. Lower Cap - A shall be assembled to the Lid lifting leg support flange having tapped holes. The lid lifting leg support is available on the vacuum chamber lid.

6.18.10. Boring and machining of cylinder mounting bracket shall be carried out after of completion of fabrication.

6.18.11. Dumb-bell shall comprise of shaft with two half balls at each end. The half balls and the shaft shall be made from a single alloy steel (EN-24) forging and are accurately machined as per drawing specifications.

6.19. Vacuum chamber Lid locking assembly

Drawing No.	Title	Revision
626-106-00-001-A2-R0	Vacuum Lid locking assembly	R0

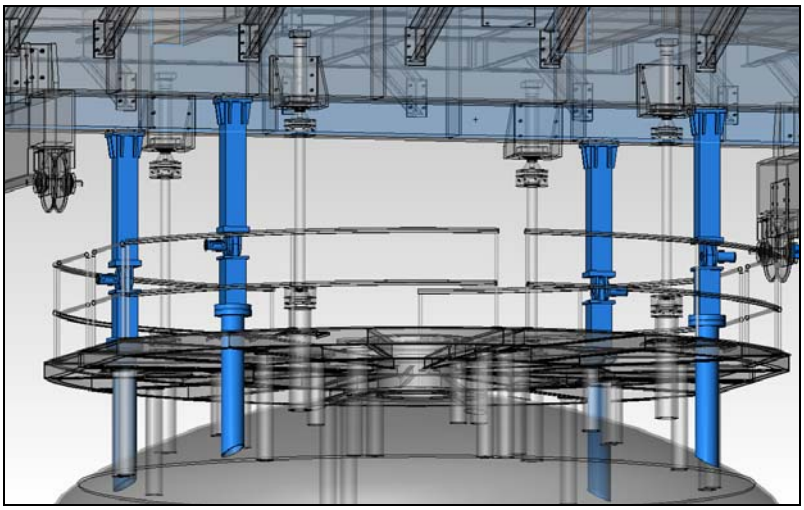

Fig. 15. Vacuum chamber lid locking system

6.19.1. Vacuum lid locking system shall perform the function of positively locking the vacuum chamber lid at raised position.

6.19.2. Vacuum chamber lid with Vacuum Lid locking leg support will be provided by Department. Party shall ensure alignment of lid lifting support w.r.t. working platform structure and any correction required shall be carried by the party at site.

6.19.3. Boring of Ø80 hole in Part no 5 (Drawing no - 626-106-00-003-A3-R0) shall be carried out after completion of fabrication in single setting.

6.19.4. Boring of Ø150 hole in Part no 2 (Drawing no - 626-105-00-003-A3-R0) shall be carried out after completion of fabrication.

6.19.5. Machining of Part no 1 (Drawing no - 626-106-00-003-A3-R0) shall be carried out after fabrication.

6.19.6. Machining of Part no 1 (Drawing no - 626-106-00-004-A3-R0) shall be carried out after fabrication.

6.20. Drip collection tray

Drawing No.	Title	Revision
626-107-00-001-A1-R0	Drip collection assembly	R0

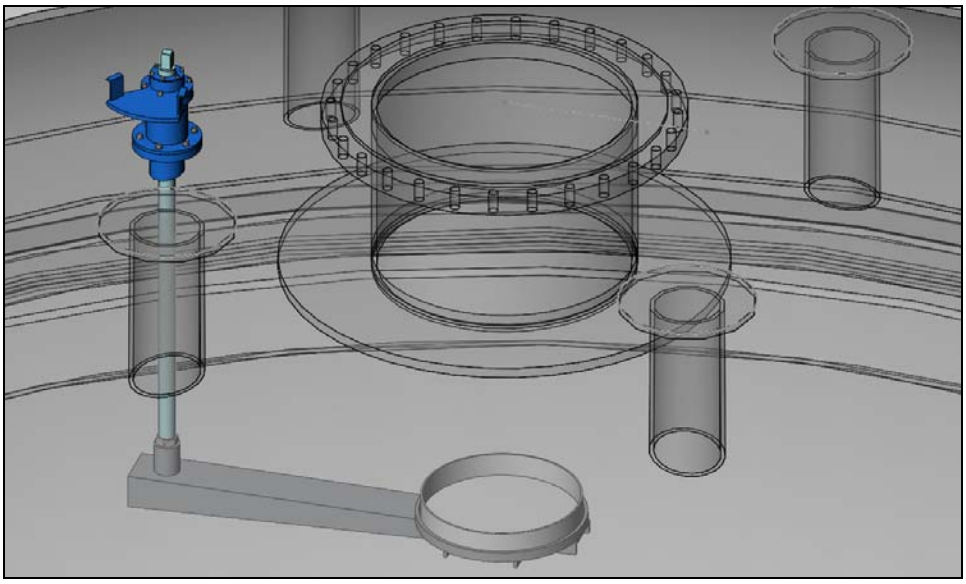

Fig. 16. Drip collection assembly with Vacuum chamber lid

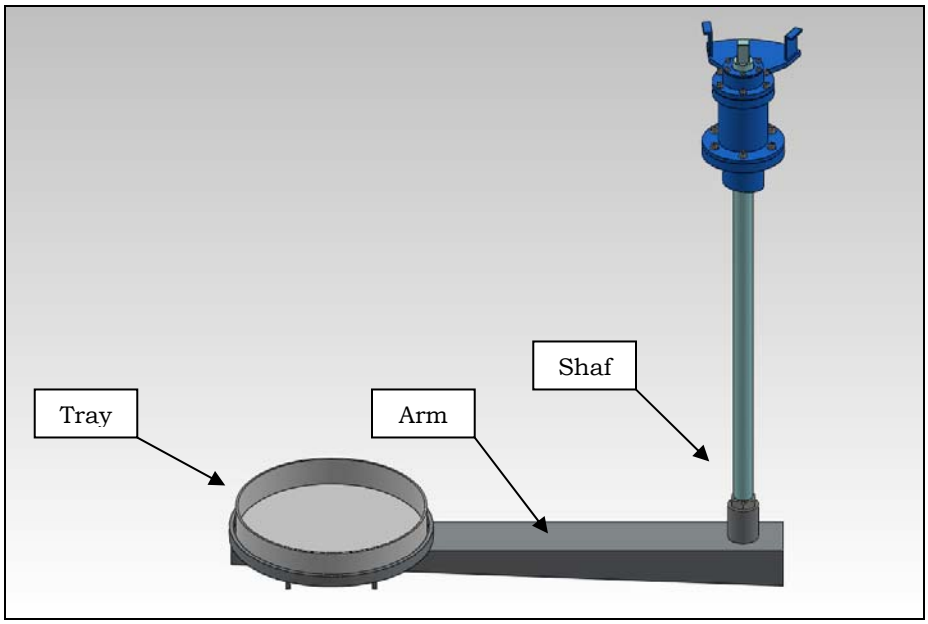

Fig. 17. Drip collection assembly

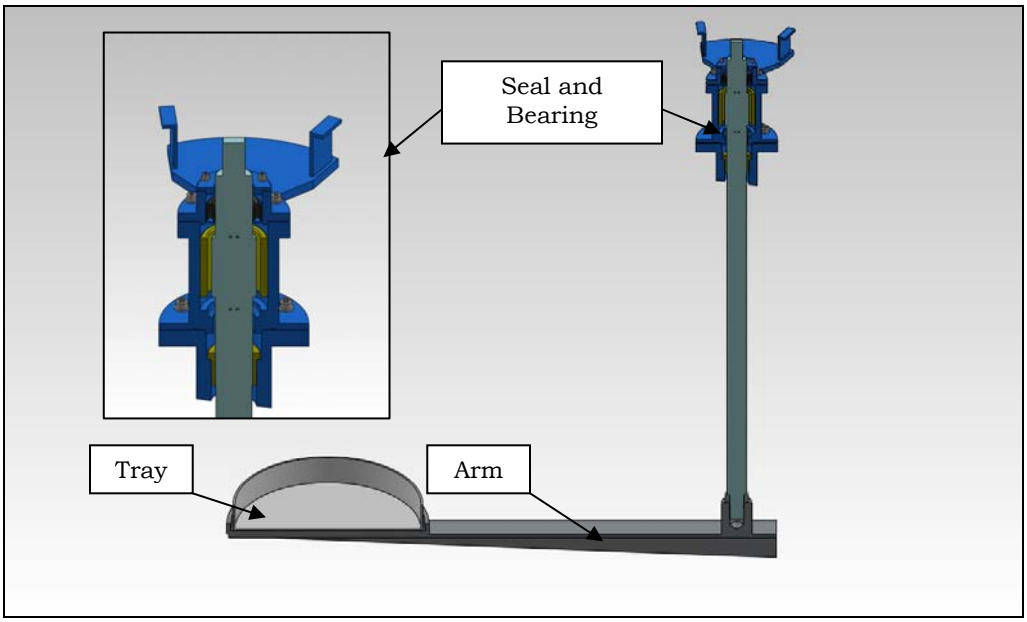

Fig. 18. Sectional view of Drip collection assembly

6.20.1. The Drip collection assembly comprises of the following sub assemblies or components:

(a) Tray,
(b) Arm,
(c) Shaft,
(d) Bearing housing,
(e) Stopper,
(f) Lever,
(g) Seal housing,
(h) Bush,
(i) Spacer and
(j) Seal cover
(k) Removable tray

6.20.2. Drip collection arm shall be provided with removable type tray.

6.20.3. The removable tray shall be made from stainless steel SS 304 L sheets or plates rolled and cut to the required diameter. The bottom plate of the tray shall be made of a single piece of stainless steel SS 304 L cut to the required dimensions. Tray shall be buffed to have mirror finish.

6.20.4. Lock nut shall be provided at the interface of Arm with shaft.

6.20.5. The arm shall be made from aluminum plates with a fitting at the shaft end to engage with the shaft and with a plate with a groove matching with the outer diameter of the tray.

6.20.6. The upper end of the shafts passed through a vacuum seal through the seal housing. The shaft is supported on antifriction bearings installed in the bearing housing fitted on the seal housing. The upper end of the bar has a square end to which a lever is applied for turning the shaft and thus moving the arm and tray under or away from the central port of the vacuum lid.

6.20.7. The seal housing is machined from IS 2062 Gr-B solid blocks as per drawing specifications.

6.20.8. V seals shall be placed in the seal housing to arrest vacuum. Party shall ensure effectiveness of vacuum sealing. Suitable Fabric Hinge type XE Make: Vako shall be used. Seal shall be vacuum tight.

6.20.9. Antifriction deep groove ball bearings shall be installed in the bearing housing. Only SKF or FAG bearings shall be used.

6.20.10. Provision for sensing the position of the drip collection tray shall be provided with proximity sensors and transmitted to the instrumentation and control system. Provision for mounting of sensors shall be made by the Party. Sensor and cable work will be carried out by the department.

6.21. Powering of working platform

6.21.1. Working platform HPP shall be powered through MCC provided in service room. Distance between HPP and MCC will be about 10m. Necessary cable will be provided by the department.

6.21.2. Party shall carry out end termination at both ends.

6.22. Working platform rails

Standard	Title	Specification
IS 3443	Working platform rail	Crane Rail A 75, DIN 536 PT 1:1991

6.22.1. Rails shall be provided for movement of working platform and for movement of Transfer Car. Length of rail for working platform shall be 45 m

6.22.2. Rails for transfer car shall be made of block and plate (Part 4 of 626-102-02-002-A1-R0). Length of rail for transfer car shall be 45 m

6.22.3. Working platform rails carry the working platform along with the other systems mounted on the working platform.

6.22.4. Transfer car moves on the rails provided on floor to rails provided on working platform main beam.

6.22.5. Rail for working platform shall be clamped. Rail for Transfer car shall be welded.

6.22.6. Transfer car rails fixed on FFL shall match to working platform rails. Level difference between TC rails shall be within 0.5mm to ensure free movement of transfer car. TC rails shall be aligned with rails provided on working platform within 0.5mm.

6.22.7. Rails shall be parallel within 0.5mm.

6.22.8. Variation in normal distance (Span) between the two rails shall be within 0.5 mm.

6.22.9. EP plates are provided for fixing of rails. Shim plates shall be used to level the rails. Where ever required, shim plates shall be provided for full length. Localized height building using shim plates is not acceptable.

6.22.10. Rails shall be provided with clamps on top of embedded plates available in the girder provided in the rectangular pit area.

6.22.11. Leveling of the working platform rails shall be ensured. Leveling variation shall be maintained within 1mm for the entire length of the rails.

6.22.12. End stoppers (4 Nos for working platform and 8 nos. for Transfer car) with rubber buffer shall be provided as per given picture. End stoppers shall be welded to rails after erection at site

Fig. 19. End Stopper for Working Platform Rails

Fig. 20. End Stopper for Transfer Car Rails

6.22.13. Standard rail joint procedure shall be followed for making rail joints.

6.23. Hydraulic System

6.23.1. A typical hydraulic circuit is shown below. The items shown are indicative. Any item not shown in the circuit, but required for satisfactory operation of working platform shall be considered by the Party. Quantity mentioned is minimum required and Party shall review and add any item if required for smooth operation.

6.23.2. Working platform shall have following operations

- Forward/Reverse motion in main speed using solenoid valve
- Forward/Reverse motion in micro speed using solenoid valve
- Lid up/down operation using manual valve
- Lid up/down operation using solenoid valve

6.23.3. Hydraulic power pack shall consist of standard items like

6.23.4. Electric Motor

6.23.5. Gear pump

6.23.6. Oil tank

6.23.7. DC valve

6.23.8. Valve block, Pressure gauge (glycerin filled) with isolation valve, minimess coupling and flexible hose with gauge.

6.23.9. Pressure relief valve,

6.23.10. Flow control valves

6.23.11. Pressure line filter

6.23.12. Return line filter

6.23.13. Panel mounted Hydraulic pressure gauge (4” dial size)

6.23.14. Strainer,

6.23.15. Drain point with ball valve and plug

6.23.16. Air breather, temperature transmitter

6.23.17. Oil level indicator (view glass), High & low level switches

6.23.18. Air-blast radiator type oil cooler

6.23.19. Lifting brackets and legs

6.23.20. Opening for cleaning of tank

6.23.21. The hydraulic power pack is located in service room at a distance of approx. 30m from the working platform.

6.23.22. Carbon Steel, Chromium Free tubes and fittings (EO series) shall be used for hydraulic lines from power pack to working platform. Tubes and fittings shall be provided with appropriate coating to avoid rusting. Flexible hose as per following details shall be used for connecting fixed pipe lines with power pack

Table 3. List Of Hydraulic Hoses

Sl. No.	Location	Description	Qty
1.	From power pack to fixed line	Size –3/4” Length – 1.5m* Working pressure – 215 Bar Rating – SAE 100R2AT Make – Markwell/Parker	1 no.
2.	From power pack to fixed line	Size –3/4” Length – 2.5m* Working pressure – 215 Bar Rating – SAE 100R2AT Make - Markwell/Parker	1 no.
3.	From power pack to fixed line	Size –3/4” Length – 1.5m* Working pressure – 215 Bar Rating – SAE 100R2AT-E Make - Markwell/Parker	1 no.
4.	From power pack to fixed line	Size –1” Length – 2.5m* Working pressure – 215 Bar Rating – SAE 100R2AT Make – Markwell/Parker	1 no.
5.	From fixed line to working platform	Size –1” Length – 9.0m* Working pressure – 215 Bar Rating – SAE 100R2AT-12 Make – Markwell/ Parker	1 no.
6.	From fixed line to working platform	Size –1” Length – 9.0m* Working pressure – 215 Bar Rating – SAE 100R2AT-12 Make – Markwell/Parker	1 no.
7.	From fixed line to working platform	Size –1/2” Length – 9.0m* Working pressure – 215 Bar Rating – SAE 100R2AT-12 Make – Markwell/Parker	1 no.

Table 3. List Of Hydraulic Hoses			
Sl. No.	**Location**	**Description**	**Qty**
Note: Length of hoses may vary as per the site conditions.			

6.23.23. Hydraulic line shall be of following sizes

Supply and return line from Power pack (service room) to Manifold at working platform	28mm (min)
Manifold to cylinders/hydraulic motors and other connections	15mm (min)

6.23.24. From Power pack to manifold (in working platform) Sizing of tubes shall be selected in such a manner that friction losses are minimum.

6.23.25. The hydraulic piping and routing for the working platform is in the scope of the vendor.

6.23.26. Standard Parker make fittings and clamps shall be used for routing of hydraulic line.

6.23.27. On completion of hydraulic lines, system to be pressure tested to 250 bar. Blanks and other fittings/equipment required for pressure testing are in party's scope.

6.23.28. Party shall fabricate standard bracket for supporting of hydraulic line. Embedded plates (EP) are provided for fixing of support brackets. Where ever EP is not provided, bracket shall be fixed to the wall using Hilti Make pin type anchor bolts.

6.23.29. Care shall be taken to avoid criss-crossing of hydraulic pipe lines and standard Parker clamps shall be used for laying multiple pipes in a row.

6.23.30. Hydraulic line routing diagram on working platform shall be submitted before start of hydraulic line routing.

6.23.31. Hydraulic power pack is situated in safe area.

6.23.32. Provision shall be made to operate the working platform through Mobile external power pack and isolating the system power pack. For this ½" QCDC with isolation valves of **Parker** make shall be provided in the circuit. (Refer hydraulic circuit for details).

6.23.33. Hydraulic power pack will be powered through PCC provided by the department. Power cable required for powering of HPP will be provided by the department. Party shall carryout the cable termination at both ends. Standard cable tray shall be used for routing of cable from PCC to HPP.

6.23.34. All hydraulic cylinders rod and piston seals shall be of **NBR**

(Neoprene) material. Party shall take necessary care while importing/procuring these cylinders.

6.23.35. Detailed hydraulic circuit with tank drawing shall be submitted for review after placement of PO.

6.23.36. Before trial run, the entire line shall be flushed with air followed by oil.

6.23.37. Pressure line and return filter elements shall be replaced after completion of trial run at site.

6.23.38. All hydraulic components like pumps, valves, cylinders, fittings etc shall be of origin from European Union/UK/USA. Country of origin certificate from manufacturer shall be submitted.

6.23.39. Hydraulic oil shall be supplied from the hydraulic power unit placed in the service room to working platform through fixed tubes. To facilitate to and fro movement of working platform, two high pressure flexible hoses shall connect working platform to fixed tubes.

6.23.40. Hydraulic control panel and valve module shall be positioned in the working platform. All the valves mounted on control panel shall be flame proof (Zone –I, Class IIA/IIB, T4)

6.23.41. Hydraulic valve module shall be accessible from the lower deck enabling manual operation from lower deck.

6.23.42. Hydraulic valve module shall be provided with a suitable Stainless steel enclosure with provisions for easy opening and operation from lower deck region.

6.23.43. Hydraulic lines shall be concealed inside the structural members. Wherever not possible standard fittings and covering shall be provided for covering the hydraulic lines.

6.23.44. Hydraulic fittings and clamps shall be of Parker make only.

6.23.45. Hydraulic lines shall be provided with permanent piping wherever possible.

6.23.46. The hydraulic Power Unit is to be kept in the Service Room about 40m away from the Casting Position.

6.23.47. Oil cooler shall be provided in the circuit (near to HPP in safe area).

6.23.48. The bidder shall realize the hydraulic system based on the Hydraulic Schematic provided with this Tender Specification.

Table 4. List of major Hydraulic Components

Description	Model no/stroke/bore		Quantity
Hydraulic Pump	Model No	PGP517AD190CM2NH2L3L2B1 40 LPM, External gear pump Make: Parker	1 No.
DC Valves	Model No	D1VW 4C NJEE Make: Parker	1 Nos.
DC Valves	Model No	DIVW 20B NJEE Make: Parker	2 Nos.
Hydraulic tank with mounting provisions	Capacity	200 litres	1 No.
Hydraulic cylinders	Model No	125JJHMI RN34MC500M1144 Stroke – 500 Bore – 125 Rod – 70 Make - Parker	4 Nos.
Hydraulic piping	Model No	Material – stainless steel Make: Parker/Ratnamani/Gandhi tubes Suitable for 250 bar application.	600m
Hydraulic fittings and other miscellaneous items	Model No	Material : stainless steel Make: Parker	Lot
Air breather	Make	Argo Hytos	1 No
	Model no	L E 0827 or equivalent	
HPP Electric motor	Make / Type	Type: 3Ø, 415V AC Squirrel cage induction motor Current: rating: 27.6 A Power: 15 KW Type of start : Delta Duty – S1 IE 2 or better	1 No.
Oil cooler Electric motor	Make / Type	Make : Kirloskar Electric co. ltd Motor rating : 0.5 hp Rated current : 1 A Type of start : Star / Delta Class of insulation : F / B Duty (Service) : S1 IE 2 or better	1 No.

Description	Model no/stroke/bore		Quantity
Oil Cooler	Make / type	Air blast oil cooler with axial flow fan and electric motor Make - Eskay Heat Transfers Private Limited, Bangalore Oil cooler capacity: 3000 kcal/hr Type : FT-FLT Model no : 040118018 Design pressure tube side: 5.0 ksc (g) @ 100 deg c Material of construction: tubes are 3/8" OD of copper and other parts are of mild steel	1 No.
Hydraulic manifold block	Make / Type	Make – Parker	As per circuit
Temperature Transmitter	Make / Type	Rosemount / Omega/ Wika Refer below for specification.	2 Nos.
Oil high & low level switches	Make / Type	Make: Shridhan Automation, Bangalore	2 Nos.
Note: - *The quantity mentioned in this table are to be supplied and the same will be issued to the party for carrying out erection works at site based on the actual requirement. Refer Hydraulic circuit for details. Actual quantity may vary to suite the functional requirement.*			

Table 5. Specification of RTD Sensors

Description	Specification
Make	Rosemount / Omega/ Wika
Type of sensor	Pt100 4 – wire Duplex Type, Spring loaded. RTD stem dia. min 6 mm.
Accuracy	IEC 751 Class A & DIN 60751
Temperature Coefficient:	0.00385 Ohms/ ^{0}C
Temperature Range:	0 to 100 ^{0}C
Sensor wire	PTFE insulated, Nickel coated copper stranded wire.
Sensor Immersion length	Refer Table No: 1B
Sheath	Sensor shall be housed in ¼" SS 316 sheath. Refer the note in table 15B.
Protection	IP 65 Ex-Proof to Zone 1, GR-IIA, IIB & T4.
Calibration certificate	Required and traceable to NIST/ NABL.

End connection	Head with screwed cover in die-cast aluminium & chain.
Cable Entry	½" NPT Female with double compression cable gland
Thermowell	SS316, Bar-stock assembly, tapered construction and suitable to RTD immersion length.
Application	Hydraulic oil temperature measurement.

Table 6. Specification of Level Switch	
Description	**Essential Specification**
Make	Minilec/ Switzer/ Danfoss/ Omron/ IFM
Output contact	Potential free DPDT. Contact rating 24V DC, 2A.
Mounting location	On top of the hydraulic oil tank. Max oil temperature is 100 ^{0}C
Type	Magnetic float/ reed switch type
Protection	IP 65.
Range	300 - 500 mm adjustable to suit power pack
Fittings	Required
Cable Entry	½" NPT Female with double compression cable gland
Body material, sensing element, fittings	SS or suitable for oil &corrosive (coastal) environment.
Certificate	Calibration test certificates are required.

6.24. Hand rails (SS 304)

6.24.1. Hand rail shall be provided for a length of 125 m as per typical sketch shown in this document.

6.24.2. Routing will be decided based on the site condition.

6.24.3. Swing door shall be provided at transfer car areas and other places as per site requirement.

6.24.4. Tower bolt shall be provided for locking of doors in open and closed condition.

6.24.5. General dimensions and the format of the hand-rail shall be as per the below fig. The configuration and specification of various elements including thickness and locations shall confirm to that provided in the drawing.

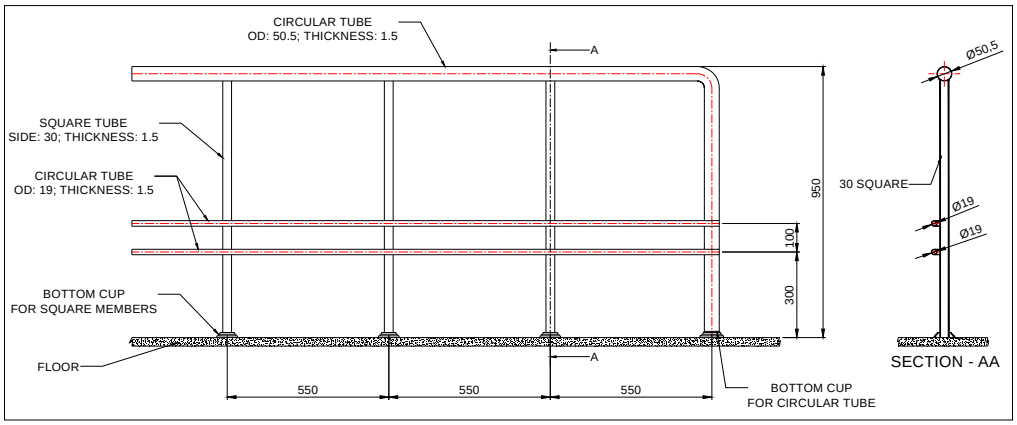

Fig. 21. Hand rail – Typical configuration

6.24.6. Pre-polished SS 304 pipe and other fittings like elbow, bend, bottom cup etc. shall only be used for making of hand rail.

6.24.7. Stainless steel handrails, vertical members and supporting members required for respective works shall be of SS 304 and the workmanship shall comply with relevant IS standard.

6.24.8. Hand rail routing shall be as per site condition. Hand rail fabrication shall be carried out at site after erection of platform.

6.24.9. SS chains shall be provided at doors.

6.24.10. All the weld areas shall be buffed and polished to mirror finish.

6.24.11. All the sharp edges shall be ground to obtain smooth finish.

6.25. Mounting of sensors/encoders

Transfer car houses various sensors and encoders to monitor and control the operations from control room. Party shall provide provision for mounting following sensors/encoder

Sl. No.	Type of sensor	Location	Purpose	Quantity for each Transfer car
1.	Encoder	Idle wheels	To monitor the location of working platform	2
2.	Proximity sensor	On working platform frame	For fast forward position	3
3.	Proximity sensor	On working platform frame	For slow forward position	3
4.	Proximity sensor	On working platform frame	For fast reverse position	3
5.	Proximity	On working	For slow reverse	3

Sl. No.	Type of sensor	Location	Purpose	Quantity for each Transfer car
	sensor	platform frame	position	
6.	Proximity sensor	On working platform frame	For lid raise	12
7.	Proximity sensor	On working platform frame	Lid lower	12
8.	Proximity sensor	On working platform frame	Lid un lock	12
9.	Proximity sensor	On working platform frame	Lid lock	12

6.25.1. Sample sensors will be provided by Department. During trial run at Party's place, Party shall fix these sensors/encoders in all locations and ensure that proper fixing arrangement is provided. Party shall provide temporary DC power to these sensors/encoders and ensure proper operation. Each operation shall be carried out by operation of solenoid operated DC valves & manual DC valves and sensor feedback shall be ensured.

6.25.2. For monitoring of each operation, three sensors have to be mounted. Drawings given along with tender shows provision of two sensors for each location. Party shall carryout detailed engineering to fix three sensors for monitoring of each operation. Exact sensors/encoder sizes will be provided later. SS (buffed and polished) bracket shall be provided for fixing of sensors where ever required.

6.25.3. Permanent Cable routing and powering of sensors/encoders will be carried out by Department after receipt of item at site.

7. Thermal Stress Reliving

7.1. General instruction for stress reliving

7.1.1. Stress reliving shall be carried out for following components:

Table 7. List of components for Stress reliving

Sl. No.	Item Description	Drawing No	Quantity
1.	Cylinder Mounting Bracket	626-105-00-003-A3-R0	4
2.	Wheel Mounting bracket (fabrication)	626-101-01-003-A3-R0	4
3.	Drive mounting bracket	626-102-01-004-A2-R0	1

Sl. No.	Item Description	Drawing No	Quantity
	(RH)		
4.	Drive mounting bracket (LH)	626-102-01-005-A2-R0	1

7.1.2. Stress Relieving cycle shall be decided based on the thickness and as per ASME Sec VIII Div 1.

7.1.3. Party shall submit the Stress reliving cycle for review and approval.

7.1.4. Natural gas fired/Oil fired/electric furnace shall only be used.

7.1.5. Baffles shall be used to avoid deposit of residues on the job.

7.1.6. Entire job shall be heated at once.

7.1.7. Local heating using induction coil is not acceptable.

7.1.8. Temperature recorders shall be used during SR and data shall be submitted for review.

7.1.9. Job temperature shall be monitored and recorded using laser based temperature measurement instrument.

7.1.10. Temperature Chart shall be submitted for review during inspection.

8. Transportation

8.1.1. After completion of fabrication working platform shall be dismantled and transported to site.

8.1.2. Transportation scheme shall be submitted for review/approval.

8.1.3. Road survey shall be carried out.

8.1.4. Party shall take necessary clearance from National Highway Authority of India and all other concerned departments/ authorities to transport the working platform with all accessories from Party's site to SDSC SHAR.

9. Handling and tilting of Working Platform

9.1. At SDSC SHAR

9.1.1. For handling of working platform at our site, EOT crane, will be provided at free of cost.

9.1.2. Necessary slings, dee shackles etc. required for unloading of item shall be provided by the Party.

9.1.3. Party shall work out a detailed scheme considering the site conditions and submit the details for approval.

10. General Information

10.1. Erection and commissioning

10.1.1. Party shall mobilize man power to SDSC SHAR for unloading, erection and commissioning of working platform.

10.1.2. EOT Crane will be provided by the department during erection.

10.1.3. Party shall work out a detailed scheme considering the site conditions for erection and submit the details for approval.

10.1.4. Based on the readiness of Casting pit, and vacuum chamber, erection works of working platform will be scheduled.

10.1.5. After completion of erection, Party shall remove any additional brackets / supports welded to the structures by using Hand grinding / cutting tools. Gas cutting operations on the structure are not acceptable.

10.1.6. Installation and operational commissioning of the Hydraulic system shall be carried out by the party at our site.

10.1.7. Hydraulic pipe routing shall follow relevant standards and shall be carried out based on the requirements in the site to the satisfaction of the department.

10.1.8. Bidder shall mobilize following minimum equipment for carrying out fabrication work at our site. These items can be taken back by the party after completion of work.

- Welding equipment & TIG welding
- Gas cutting machine
- Drilling machine
- Grinding machine
- Grouting machines for drilling in concrete.
- Consumables, cleaning agents.
- Manila ropes
- Ladders, stools, to approach different heights etc.
- Other equipment/tools required for erection and commissioning.

10.1.9. All tools, consumables etc. along with necessary measuring instruments required right from supply to final commissioning shall be in the Scope of the Vendor.

10.1.10. Bidder has to remove all temporary works constructed whatsoever nature required for the proper execution of the erection works at purchaser's site.

10.2. Safety

10.2.1. It is the Bidder's responsibility to see the safety of workmen and protection of surrounding equipment at the work zone.

10.2.2. All the safety equipment required for carrying out the work such as face shields, welding goggles, helmets, safety belts etc. shall be supplied by the Vendor at his own cost.

10.2.3. Vendor shall give an under taking to observe all safety norms put forth by department from time to time, until completion of the work.

10.3. Painting

All the exposed carbon steel surfaces shall be painted as per following:-

10.3.1. Surface Preparation: Cleaning by wire brush or power tools to remove any loose dirt or mill scales from the surface.

10.3.2. Sand blasting shall be carried out to clean the surfaces before painting operation.

10.3.3. Spray painting shall be carried out for primer and paint.

10.3.4. Primer: One coat of zinc rich primer with red oxide and zinc phosphate pigments to achieve total DFT of 70 to 75 micron.

10.3.5. Final Coat: Two coats of epoxy paint of total 125 micron DFT.

10.3.6. Color – On outer and inner surface shall be Blue. Party shall get approval prior to painting.

10.3.7. Total DFT shall be 175 microns (min.)

10.3.8. Any intermediate cleaning required between successive coats of paint shall also be carried out as per manufacturer's standard.

10.3.9. Final coat of paint shall be applied after erection at our site. However, final coat shall be applied to surfaces that become in accessible after erection.

10.3.10. Necessary tools like compressor, spray gun and consumables shall be provided by the party.

10.3.11. Proper masking shall be carried out where ever required.

11. Inspection and Testing

11.1. at Party's Site

11.1.1. All the parts of the Working platform shall be assembled in full to ensure all the interfaces are met to meet the requirements.

11.1.2. Dimensional Inspection of all interfaces

11.1.3. Any other system not indicated herein, but required to make the system complete shall be included and provided at no extra cost unless otherwise specifically excluded as indicated.

11.2. Inspection and Testing after erection

11.2.1. Load test shall be carried out after erection at site. Required Test load will be provided by Department.

11.2.2. Dimensional Inspection of all interfaces

11.2.3. All operational trials at full load.

11.2.4. All Hydraulic lines shall be tested for 250 Bar.

11.2.5. Speed and current measurement shall be carried out at full load.

11.2.6. Party shall power all the DC valves and demonstrate all the functions of TC. Necessary DC power source shall be arranged by the party. At the same time functioning of sensors/encoders shall also be ensured.

11.2.7. Operation in manual modes by operating lever operated DC valves.

11.2.8. All the requirements mentioned in this document shall be tested during commissioning. Any other qualification test, stipulated at the time of commissioning shall also be carried out to test the performance of working platform.

12. Summary of Data to be Furnished by Party

12.1. Along With Technical Bid

12.1.1. List and Make of the bought out components that the bidder has considered in the proposal.

12.1.2. List and make of imported items.

12.1.3. Deviations from Technical Specification and proposed Design modifications (Annexure – 4)

12.1.4. Compliance Statement for Clause by Clause compliance.

12.1.5. Bidder shall confirm/fill all enclosed Annexures and submit along with the offer.

12.2. Data to Be Furnished By Party after the Award of Tender

12.2.1. Bar chart for supply & erection schedule indicating the date of completion of various activities so as to complete the execution of the tender within the time frame stipulated in the tender specification.

12.2.2. Quality Assurance Plan based on the proposed manufacturing process.

12.2.3. Proposed Project execution plan and fabrication process plan.

12.2.4. Hydraulic Circuit diagram and part list for the Hydraulic components used

12.2.5. Party shall submit copies of all drawings (Refer mile stones for details).

12.2.6. Any manufacturing and fabrication work carried out prior to the approval of the drawings will be at the Bidder's own risk and expenses.

12.2.7. Drawings submitted by the Party for approval shall be checked/reviewed by the PURCHASER and comments, if any, on the same will be conveyed to the Party. Party shall incorporate all these comments in his drawings.

12.2.8. Party shall send copies of instruction manuals along with the dispatch of equipment. Instruction manual shall contain full details, as-build drawings of all equipment, erection procedure, testing procedure, operation & maintenance procedure of the equipment. If after commissioning and initial operation of the equipment, the instruction manuals require any modifications/additions the same shall be incorporated and the updated instruction manuals shall be submitted by the Party to Purchaser.

12.2.9. Purchase orders for bought out components

12.2.10. Test Certificates (physical and chemical) for all raw materials.

12.2.11. Procedures for Welding, Qualifications of Welders, Painting and Finishing

12.2.12. Transportation Plan

12.2.13. Erection and Commissioning Plan

12.2.14. Inspection and Testing Plan

12.2.15. Dimensional inspection reports generated during entire fabrication process, erection and commissioning.

12.2.16. All the reports generated during fabrication including material test certificates and other NDT tests.

12.2.17. Final as built drawings, 2 sets hard copy and one set soft copy in *.dwg format.

13. Major Milestones

Sl. No.	Description	Time (in days)	Remarks
1.	Placement of PO	T	
2.	Submission of PERT/Bar chart for overall schedule and details of project team, work break down structure (micro level)	T+15	
3.	Submission of Fabrication process plan	T+15	
4.	Submission of GA drawings showing overall dimensions, fabrication/ manufacturing drawings etc.	T + 30	
5.	Work break down structure along with project milestones (micro level)	T + 30	
6.	Submission of purchase order copy (Un-priced) for raw materials / various bought out items etc. to complete the scope of work.	T + 45	
7.	Full assembly of working platform at Vendor's place	T + 150	
8.	Receipt of working platform to SDSC SHAR	T + 180	
9.	Erection and Commissioning	T + 210	

14. List of suggested Vendors

Sl. No.	Category	Item Description	Suggested Vendor
1.	Mechanical	Plate raw material	M/s Jindal/Sail/Tisco/Essar/VSP
2.	Mechanical	fasteners and washers	Unbrako/DFL/TVS
3.	Mechanical	Forged items	Bharat Forge
4.	Electrical	Power pack Motor	Bharat Bijlee/Crompton Greaves/ Siemens/ABB/Kirloskar
5.	Mechanical	Bearings	SKF/FAG
6.	Mechanical	Gear Box	Cyclo, Satara, India
7.	Mechanical	Couplings	Fenner
8.	Hydraulic	Hydraulic	M/s Parker

Sl. No.	Category	Item Description	Suggested Vendor
		cylinders, valves, filters, fittings, clamps	
9.	Hydraulic	Hydraulic hoses	M/s Parker/Markwell
10.	Hydraulic	Tubes	M/s Ratnamani/ Parker
11.	Hydraulic	Oil Cooler	Eskay Heat Transfers Private Limited, Bangalore
12.	Hydraulic	Hydraulic system integrator	M/s Hydrocare, Bangalore M/s Pascal Hydraulics, Bangalore M/s Maha Hydraulics, Chennai
13.	Vacuum seal	Vacuum seal	M/s Vako
14.	Misc	Paints and Primer	Berger/Asian/Shalimar/Nerolac
15.	Other items	Approval to be obtained from department before placement of order.	

15. List of Annexure

Sl. No.	Description
Annexure-1	Bid qualification criteria
Annexure-2	Compliance Statement
Annexure-3	QAP
Annexure-4	Deviations

Bid Qualification Criteria for Supply of Working platform

Bidders who are qualifying/meeting following Technical and Financial capabilities are eligible to participate in the bid for supply of working platform. Bidder shall furnish all the details with documentary proof and submit the same along with quotation. Bids of the parties which are not meeting the following criteria will not be considered for evaluation and will be rejected without seeking any further clarifications. Bidder shall furnish the details of their resources in factory like manpower, machinery, quality system etc., for department to assess their capability.

Sl. No.	Criteria / Requirement	Reply / Eligibility from M/s....
Technical Qualification Requirements: The bidder should meet the following technical qualifying requirements and shall submit relevant certificates/data to establish his credentials along with the technical bid.		
1.	The Bidder should be an organization with previous experience in having executed contracts for design, engineering, manufacture, supply, testing of mechanisms and structures. Enclose list of works executed.	
2.	The Bidder should be an organization with previous experience in having executed at least two contracts worth min 50 lakh involving engineering, manufacture, supply, testing of hydraulically operated special purpose mechanisms. Enclose list of works executed with details and PO copy.	
3.	The Bidder shall have dedicated design and drafting team. List shall be enclosed.	
4.	Party shall have in-house facility for carrying out machining of minimum 2m long articles. In case it is planned to outsource, details of sub-vendor along with his capabilities shall be submitted.	
5.	Party shall have experience in integrating the hydraulic system. List of similar works carried out shall be submitted. In case it is planned to outsource, name of sub-vendor shall be from list of suggested vendors.	

6.	Party shall have qualified welders and erection team.	
7.	Party shall have experience in erection and commission of large size mobile platforms/trolleys weighing more than 50t. List of such jobs shall be enclosed.	
Financial Qualification Requirements: The bidder should also meet the following financial qualification requirements:		
8.	The Bidder should have annual turnover of not less than a value of Rs. 10 crores per year for last three financial years ending 31-03-2015.	
9.	Bidder should possess a current Solvency Certificate from Nationalized Bank for an amount of not less than Rs. 50 Lakh	
10.	IT/ TDS certificate shall be submitted for last 3 years.	
11.	Bidder shall submit audited statement of financial status for last 03 years.	

1. Important notes:

1.1. In the above technical qualification, bidder shall clearly indicate the list of sub vendors in case of outsourcing if any. The same shall be evaluated and approved by purchaser.

1.2. Bidder shall furnish all the above details fully and explicitly. The party shall enclose the documents in support of the details provided in the bidder qualification.

1.3. Please note that the "BID" without above mentioned documents/information in support of the eligibility criteria will be summarily rejected.

1.4. No further clarifications will be seeking in this regard.

2. Bid Selection Procedure and Process of Pre-Qualification

Step -1: Technical Bids will be opened and scrutinized for meeting all technical specification and supply conditions

Step -2: Short listing based on documents submitted, satisfying all the eligibility criteria given above by the Party or individual along

with their Bid / application. (Non-submission of any document as given in above list within stipulated time leads to rejection of Bid)

Step–3: Subsequently Bidder's competency, their technical achievements and financial status will be evaluated suitable for this project. Feedbacks from Bidder's clients will be verified.

Step - 4: If required, visit will be made to their factory/ Party by technical team (ISRO or third party) for accessing the capability of manufacturer.

Step - 5: Visit to sites, wherever required by technical team (ISRO or Third party)

ISRO-SHAR reserves right to verify the information/data furnished by Bidder. If the same is found as fault or with any deviation the bid will be rejected.

Only those Bidders who are found suitable & meeting all above qualification Criteria/requirements will be finally qualified for opening the Price Bids for evaluation.

Annexure-2

Compliance Statement Form

Sl. No.	Description	Party's compliance Yes/No
General terms		
1.	Confirm that the entire scope of work as given in the tender specification is considered for quoting the price. All deviations shall be brought out separately. In the absence of deviations list, it will be presumed that all the specification given is adhered to.	
2.	Fabrication, transportation, erection and commissioning of Working Platform as per the details given in Drawings and annexure.	
3.	Performance Bank Guarantee for 10% of the order value should be furnished in the form of Bank Guarantee from nationalized/scheduled bank or by Demand Draft valid till warranty period plus sixty days as claim period Liquidated damage.	
4.	Party shall submit security deposit for 10% of the total order value. Security Deposit shall be obtained through Bank Guarantee or fixed deposit receipt from any of the Scheduled Banks executed on non-judicial stamp paper of appropriate value, and shall be valid for a period of sixty days beyond the date for completion of the Purchase Order.	
5.	If the supplies are not made by the end of delivery period, liquidated damage will be levied @ 0.5 % per week or part hereof subject to a maximum of 10% of total order value.	
6.	Party shall submit EMD of Rs. 5.0 Lakh EMD shall be submitted in a single instalment through Demand Draft/Banker's Cheque/Fixed Deposit Receipts or Bank Guarantee from any of the Scheduled Banks executed on non-judicial stamp paper of appropriate value.	
7.	Un priced copies of all PO copies of bought out components shall be submitted after placement of order	
8.	Party shall submit the project status report every 15 days mentioning the status of fabrication activity w.r.t. drawing numbers and actual photo graphs.	

Sl. No.	Description	Party's compliance Yes/No
9.	Party shall depute their Project team/ engineers for Monthly meeting to review the status and discuss/ resolve minor issues related to project execution at SDSC SHAR/ party's site based on mutual agreement on mutually agreeable dates.	
10.	Offer shall be valid for **six months** from the due date for submission of the Bid.	
11.	In case Bid does not fully comply with the requirement of Proposal document and the bidder stipulates deviations to the clauses of the proposal, which are unacceptable to the Department, the Bid will be rejected.	
12.	All the deviations are listed in Deviation table.	
13.	Other than the deviation listed in the deviation table, all other specifications mentioned in the tender are confirmed.	
14.	The working platform shall be supplied within **Six months** from the date of award of purchase order.	
15.	Erection and commissioning at SHAR shall be completed within **One month** from the date of receipt at site.	
16.	Party shall adhere to the major milestones listed in the tender document. Deviations if any shall be brought out giving valid reasons.	
17.	All bought out items shall be from enclosed vendor list only.	
18.	The item shall be guaranteed against any manufacturing defects for a period of 12 months from the date of commissioning or 18 months from the date of delivery.	
Technical Terms		
1.	The details shown in the drawing shall be verified with actual site conditions and changes if any required shall be incorporated. It is advised to visit the site to understand the interfaces and take essential dimensions wherever equipment is having interface with civil structure realised by others.	
2.	Minor changes as required based on the site condition shall be incorporated at no extra cost.	
3.	Detailed fabrication drawings shall be prepared by the party. Same shall be submitted to Department	

Sl. No.	Description	Party's compliance Yes/No
	for review, approval and record.	
4.	Quality assurance plan for fabrication and testing w.r.t to all the items shall be submitted	
5.	Quality records, history dockets, as built drawings (1 set soft copy and 2 sets of hard copy) and all documentation related to manufacturing, inspection, testing and erection.	
6.	DP test for root and final weld as per QAP.	
7.	UT testing of raw material as per QAP.	
8.	100% X-ray testing of all butt welds.	
9.	Thermal Stress Relieving shall be carried out as per details given in the proposal document.	
10.	Machining will be carried out on parts as per details given in drawing	
11.	Sand blasting and painting of platform outer and inner surface.	
12.	Erection and commissioning of platform at our site shall be carried out.	
13.	All tolerances mentioned in the drawing shall be achieved. Wherever tolerance is not specified, open tolerance mentioned in the drawing shall be followed.	
14.	Party shall indicate clearly list of works planned to offload to his sub-vendor. In such cases, details of works and sub-vendors shall be provided.	
15.	Hydraulic circuit shall be submitted by the Party after placement of firm order.	
16.	Hydraulic line routing diagram shall be submitted for review and record before the start of routing works at site	
17.	Components as given in the drawing and suggested vendor list.	
18.	First fill of oil, required for working platform commissioning shall be provided.	

Annexure-3

Quality Assurance Plan for Working Platform

Sl No	Characteristics/ type of checks	Quantum of check	Reference document	Acceptance norms	Formats of record	Party	SHAR	Remarks
1	3	4	5	6	7	8	9	10
Raw material identification								
1.	Visual & dimensional	100%	Drawing	Drawing	Material inspection report		R	
2.	Manufacturers TC verification with material specification/ drawings.	100%	ASME sec II part A/ IS 2062	ASME sec II part A/ IS 2062			R	
3.	Chemical properties Mechanical properties	100%	Drawing	Drawing	Mill TC		R	
4.	UT for plate thickness 20mm and above	100%	ASTM A 435	ASTM A 435	UT report		R	
5.	Identification mark verification and transfer of identification						R	
6.	**Welding procedure qualification**							
7.	Verification of WPS and WPQR	100%	WPS & WPQR	ASME SEC IX	WPS & WPQR		R	
Fabrication								
8.	Marking and cutting Dimensions and bevel preparation	100%	DRAWING	DRAWING	---		R	
9.	Fit-up inspection - Dimensions bevel details mismatch	100%	DRAWING	DRAWING	Fit up report		R	

Sl No	Characteristics/ type of checks	Quantum of check	Reference document	Acceptance norms	Formats of record	Party	SHAR	Remarks
1	**3**	**4**	**5**	**6**	**7**	**8**	**9**	**10**
10.	DPT on root and final pass	100%	ASME Sec - 5, Art - 6	ASME SEC VIII, App 8	DPT report		R	
11.	DPT on back grinding	100%	ASME Sec - 5, Art - 6	ASME SEC VIII, App 8	DPT report		R	
12.	RT on butt welds for plate thickness 20mm or above	100%	Drawing & PO	ASME SEC VIII, Div – 1, UW 51	RT Report		R	
13.	Heat treatment – review of SR charts		ASME SEC VIII, Div – 1, UW - 40	ASME SEC VIII, Div – 1, UCS- 56	H.T. chart		R	
Surface Perpetration & Painting								
14.	Visual Paint thickness measurement		Drawing Specification	Drawing Specification	Panting report		R	
Final Certification								
15.	Hard Stamping Document Verification, final inspection	100%	Drawing Specification	Drawing Specification	Inspection release note		W	

Manufacturer Quality Records

1. Manufacturer certificate
2. Material traceability summary sheet
3. Material test certificate
4. NDT Examination Reports
5. Final Dimensional Reports
6. Heat treatment chart
7. Hard stamp rub-off details

Note

1. All NDT procedure shall be submitted for approval
2. Material of construction as per approved drawings
3. All requirements specified/approved drawings/specifications and applicable codes shall be fully complied.
4. Job specific heat treatment, thermal stress reliving procedures shall be submitted for review and approval.
5. Final painting shall be carried out after erection at SDSC SHAR.

Legends

H	-	Hold
R	-	Review
W	-	Witness
MTC	-	Material test certificate
TC	-	Test certificate
UT	-	Ultrasonic Test
RT	-	Radiography test
MPI	-	Magnetic particle test
DPT	-	Dye penetrant test

Annexure-4

Deviation Table

Sl. No.	Tender Specification	Deviations	Reason for Deviations

REF. DRG. NO.

COM. FILE NO.

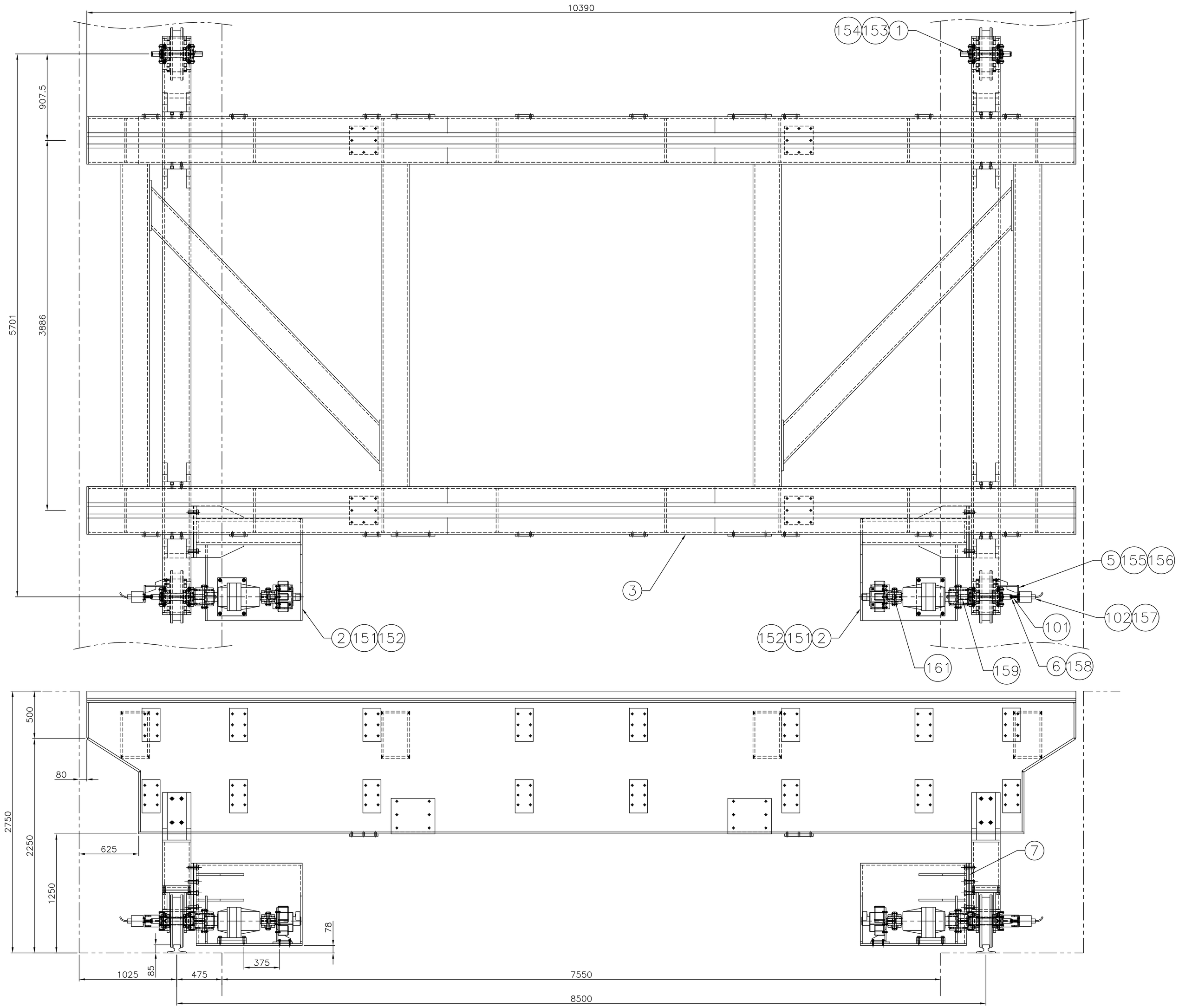

PART NO.	DESCRIPTION	MATERIAL	SPECIFICATION	QTY.
1	WHEEL MODULE ASSEMBLY	REF DWG.	626-101-01-001-A1-R0	04
2	WORKING PLATFORM DRIVE ASSEMBLY	REF DWG.	626-102-01-001-A2-R0	02
3	MAIN BEAM & TRUCK ASSEMBLY	REF DWG.	626-102-02-001-A1-R0	01
5	ENCODER MOUNTING BRACKET (WHEEL MODULE)	REF DWG.	626-101-06-010-A3-R0	02
6	ADAPTER FOR ENCODER	REF DWG.	626-101-06-011-A4-R0	02
7	SHIM	REF DWG.	626-102-03-002-A4-R0	02
101	BELLOW COUPLING	PEPPERL+FUCHS	9401 12x12, SPRING STEEL	02
102	ENCODER (FREE ISSUE)	PEPPERL+FUCHS	MULTITURN ABSOLUTE ENCODER AVM14	02
151	HEX. HEAD SCREW	IS:1363-1967	M30 x 90	16
152	PLAIN WASHER	IS:5370-1969	M30	16
153	HEX. SOC. HEAD CAP SCREW	IS:2269-1967	M20 x 60	16
154	PLAIN WASHER	IS:5370-1969	M20	16
155	HEX. SOC. HEAD CAP SCREW	IS:2269-1967	M8 x 25	08
156	PLAIN WASHER	IS:5370-1969	M8	08
157	HEX. SOC. HEAD CAP SCREW	IS:2269-1967	M6 x 12	08
158	HEX. SOC. HEAD CAP SCREW	IS:2269-1967	M5 x 10	08
159	KEY	IS:2048-1975	14 x 9 x 85 L	04
161	KEY	IS:2048-1975	25 x 12 x 85 L	02

Note: ENCODER WILL BE FREE ISSUE

DO NOT SCALE THE DRAWING
ASK IF IN DOUBT
UNLESS OTHERWISE SHOWN
ALL DIMENSIONS ARE IN MILLIMETERS
REMOVE SHARP EDGES & BURRS
CHAMFER 1 M.M. X 45°
MACHINING FINISH IN MICRONS :-
▽ 8 – 25 ▽▽ 1.6 – 8
▽▽▽ 0.025 – 1.6 ▽▽▽▽ < 0.025

DEVIATION FOR NON TOLERANCED DIMENSIONS (IS -2102)

DIAMETERS & LENGTHS	
UPTO & INCL. 6	+0.1
6 – 30	+0.2
30 – 120	+0.3
120 – 315	+0.5
315 – 1000	+0.8
1000 – 2000	+1.2
2000 – 4000	+2.0
4000 & ABOVE	+3.0

LENGTH IN M.M. OF SHORTER SIDE OF ANGLE UPTO & INCL.	
1– 6	± 1°–0'
6– 30	± 0°–30'
30–120	± 0°–20'
120–400	± 0°–10'

SPP

TITLE: WORKING PLATFORM ASSEMBLY

SATISH DHAWAN SPACE CENTRE
SOLID PROPELLANT PLANT
I.S.R.O SRIHARIKOTA

MATERIAL:	REF. BOM
FINISH:	
DRAWN	R.S
DRG.CHKD	C.P.K.
APPROVED	M.P.

SCALE	DRG. NO.	DATE	SHEET
1 : 21	626-102-00-001-A1-R0	05.08.11	OF

PROJECTION

REF. DRG. NO.

COM. FILE NO.

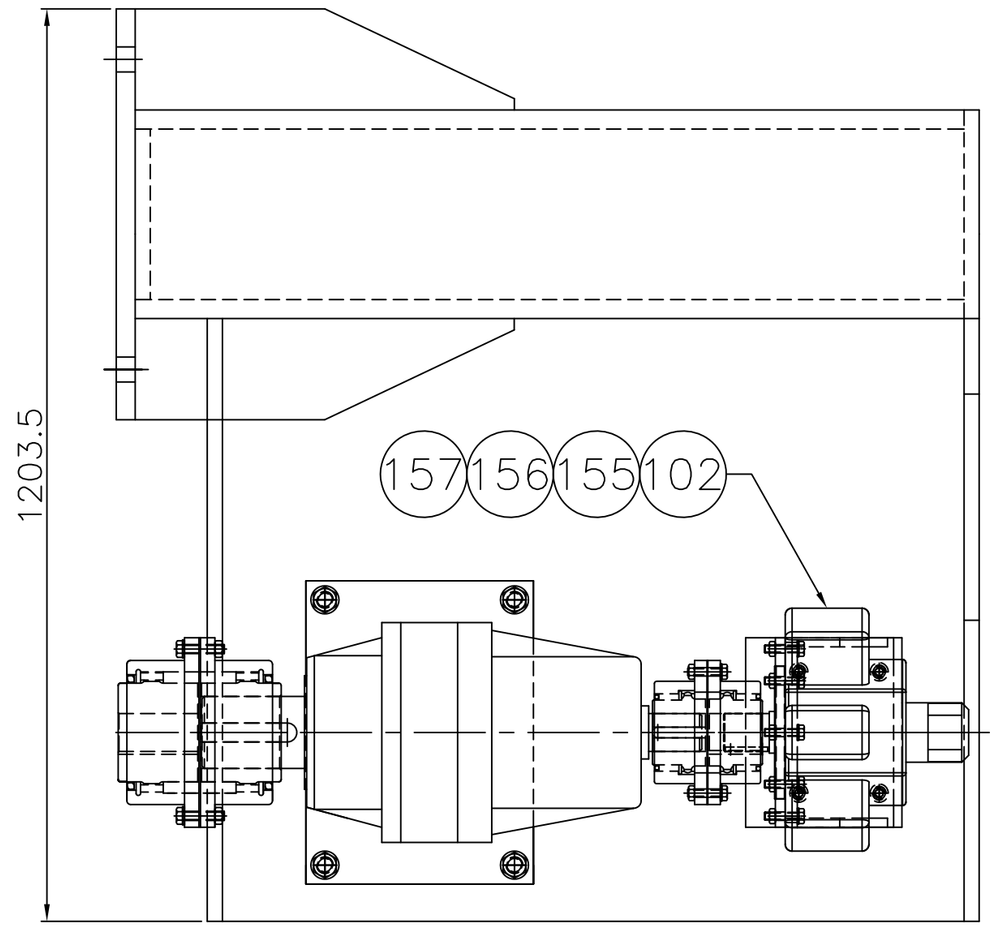

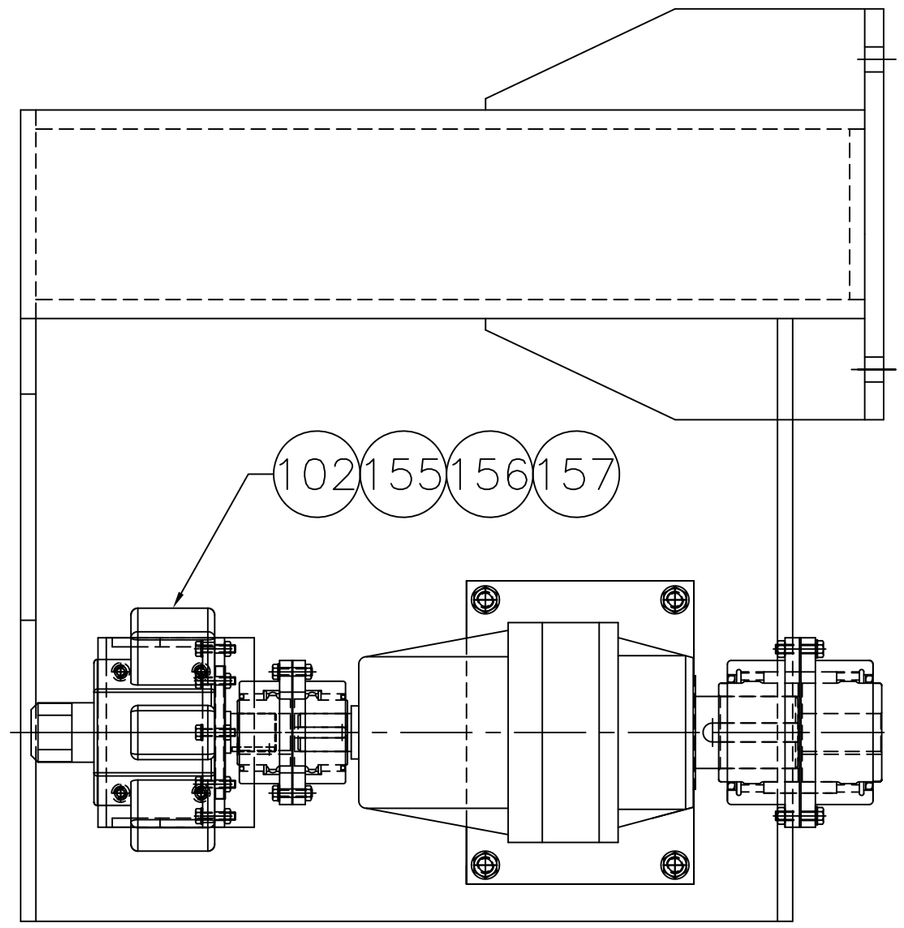

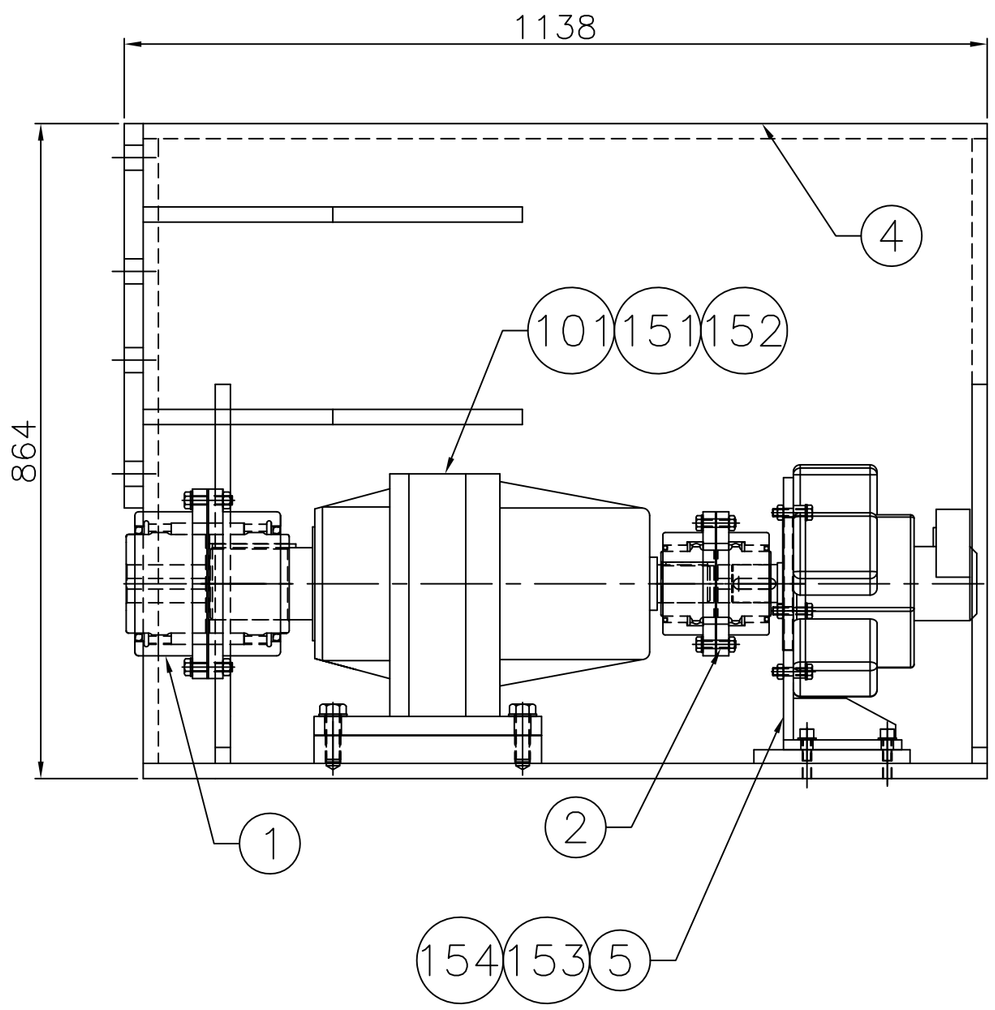

LEFT SIDE DRIVE ASSLY.

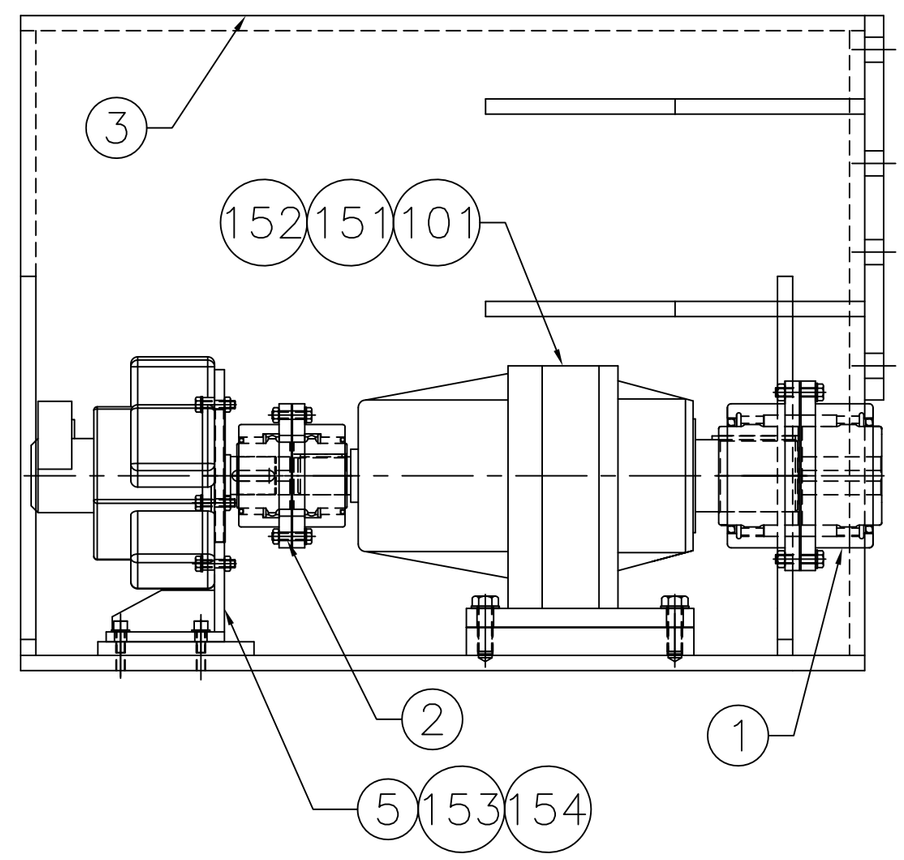

RIGHT SIDE DRIVE ASSLY.

PART NO.	DESCRIPTION	MATERIAL	SPECIFICATION	QTY.
1	FLEXIBLE GEAR COUPLING FENNER SIZE 4	REFER DWG.	626-102-01-002-A3-R0	02
2	FLEXIBLE GEAR COUPLING FENNER SIZE 1	REFER DWG.	626-102-01-003-A3-R0	02
3	DRIVE MOUNTING BRACKET (RH)	REFER DWG.	626-102-01-004-A2-R0	01
4	DRIVE MOUNTING BRACKET (LH)	REFER DWG.	626-102-01-005-A2-R0	01
5	HYDRAULIC MOTOR MOUNTING BRACKET	REFER DWG.	626-102-01-006-A3-R0	02
101	PLANETARY GEAR BOX	MAKE: CYCLO	MODEL : 4007-2	02
102	HYDRAULIC MOTOR	MAKE: PARKER/	MODEL : MR250	02
151	HEX. HEAD SCREW	IS:1363-1967	M20 x 60	08
152	PLAIN WASHER	IS:5370-1969	M20	08
153	HEX. HEAD SCREW	IS:1363-1967	M12 x 30	08
154	PLAIN WASHER	IS:5370-1969	M12	08
155	HEX. HEAD SCREW	IS:1363-1967	M10 x 45	10
156	PLAIN WASHER	IS:5370-1969	M10	20
157	HEX. NUT	IS:1363-1967	M10	10

NOTES:

HYDRAULIC MOTOR : HIGH TORQUE LOW SPEED OIL HYDRAULIC, MR 250
MAKE: PARKER HYDRAULICS DENSION CALZONI.

GEAR BOX : PLANETARY REDUCTION GEARBOX, WITH RATIO 41.5:1
MAKE: CYCLO, MODEL: 4007-2

COUPLING : FLEXIBLE GEAR COUPLING MAKE:FENNER SIZE TYPE 1

COUPLING : FLEXIBLE GEAR COUPLING MAKE:FENNER SIZE TYPE 4

DO NOT SCALE THE DRAWING
ASK IF IN DOUBT
UNLESS OTHERWISE SHOWN
ALL DIMENSIONS ARE IN MILLIMETERS
REMOVE SHARP EDGES & BURRS
CHAMFER 1 M.M. X 45°
MACHINING FINISH IN MICRONS :-
▽ 8 - 25 ▽▽ 1.6 - 8
▽▽▽ 0.025 - 1.6 ▽▽▽▽ < 0.025

DEVIATION FOR NON TOLERANCED DIMENSIONS (IS -2102)

DIAMETERS & LENGTHS	
UPTO & INCL. 6	+0.1
6 - 30	+0.2
30 - 120	+0.3
120 - 315	+0.5
315 - 1000	+0.8
1000 - 2000	+1.2
2000 - 4000	+2.0
4000 & ABOVE	+3.0

LENGTH IN M.M. OF SHORTER SIDE OF ANGLE UPTO & INCL.	
1- 6	± 1°-00'
6- 30	± 0°-30'
30-120	± 0°-20'
120-400	± 0°-10'

SPP

TITLE: WORKING PLATFORM DRIVE ASSEMBLY

SATISH DHAWAN SPACE CENTRE
SOLID PROPELLANT PLANT
I.S.R.O SRIHARIKOTA

MATERIAL:	REF BOM
FINISH:	
DRAWN	R.S
DRG.CHKD	C.P.K
APPROVED	M.P
SCALE	1 : 8
DRG. NO.	626-102-01-001-A2-R0
DATE	05.08.11
SHEET	
OF	

PROJECTION

REF. DRG. NO.
COM. FILE NO.

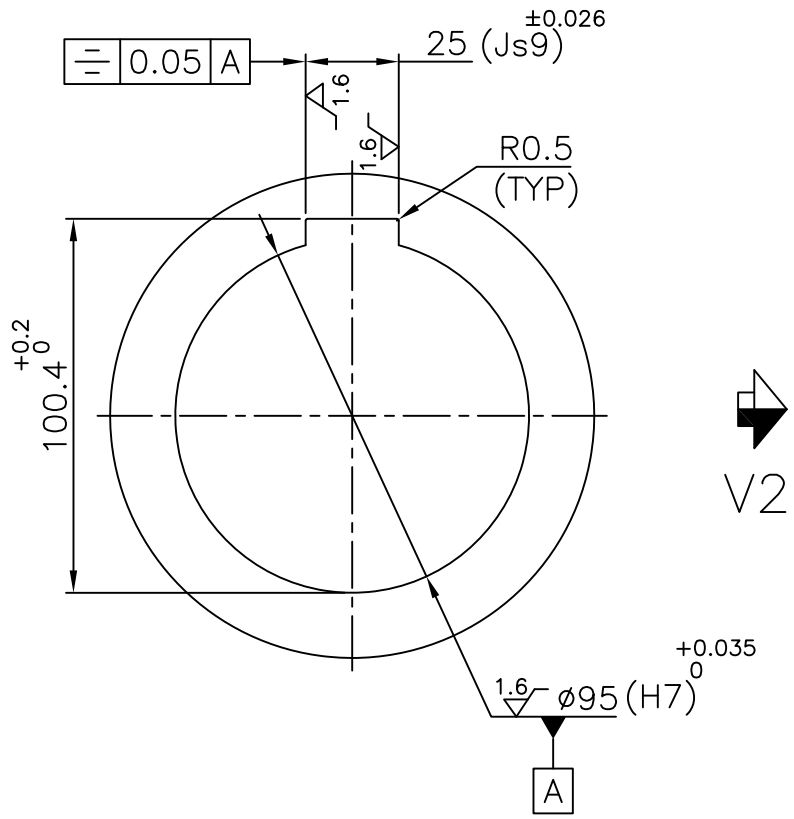

KEYWAY DETAIL–V2
FOR GEAR BOX END

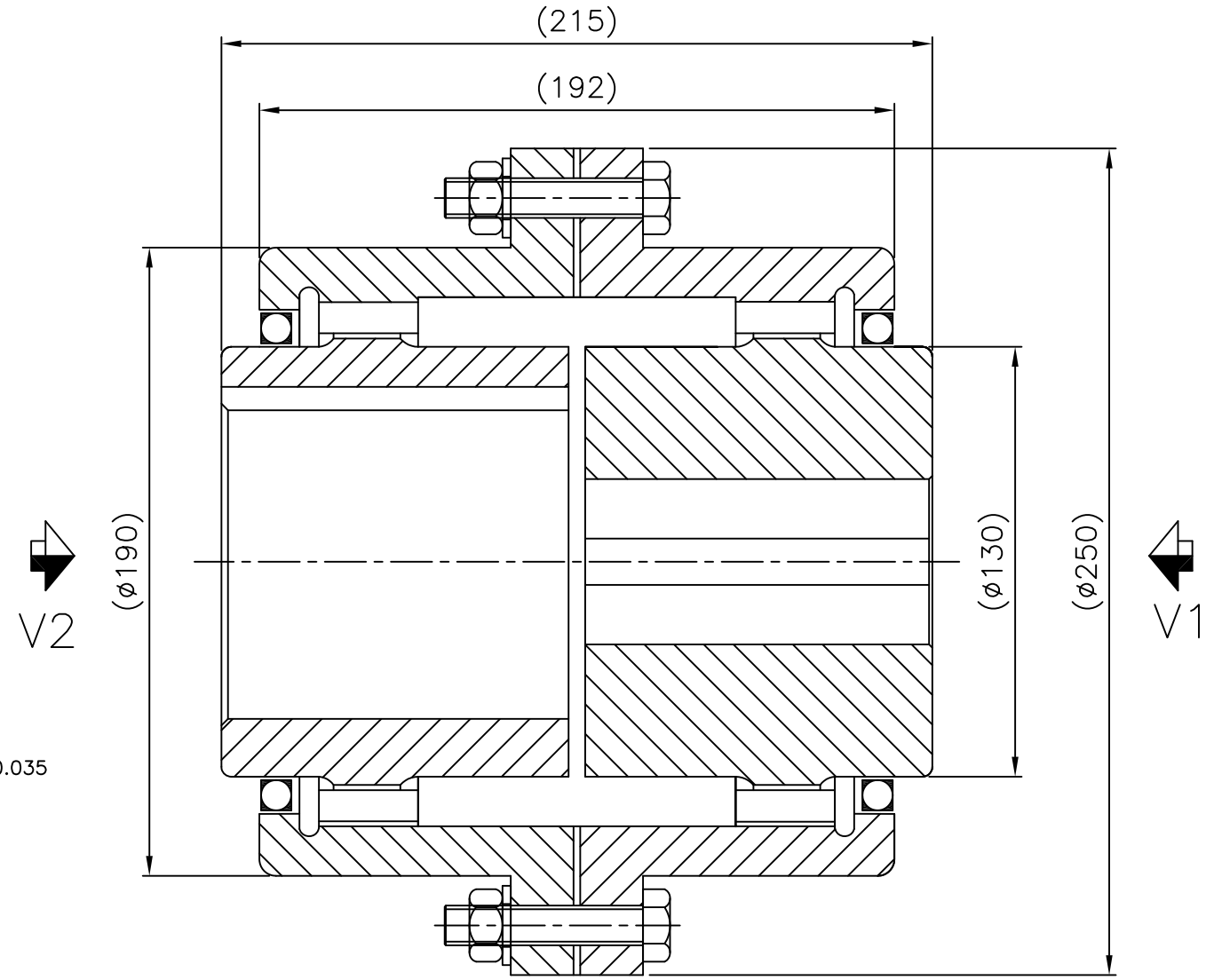

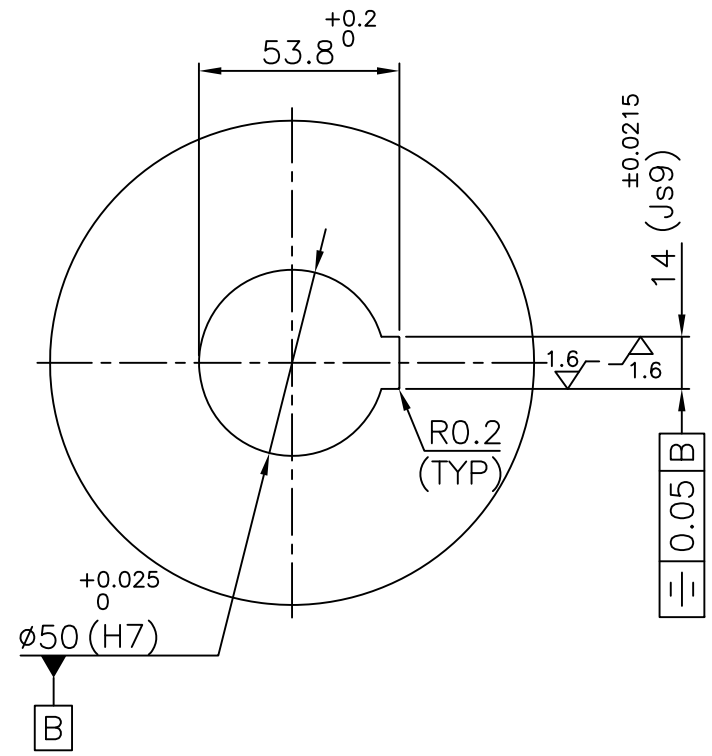

KEYWAY DETAIL–V1
FOR WHEEL MODULE END

NOTES:

1. REMOVE ALL SHARP CORNERS AND BURRS.

DO NOT SCALE THE DRAWING
ASK IF IN DOUBT
UNLESS OTHERWISE SHOWN
ALL DIMENSIONS ARE IN MILLIMETERS
REMOVE SHARP EDGES & BURRS
CHAMFER 1 M.M. X 45°
MACHINING FINISH IN MICRONS :–
▽ 8 – 25 ▽▽ 1.6 – 8
▽▽▽ 0.025 – 1.6 ▽▽▽▽ < 0.025

DEVIATION FOR NON TOLERANCED DIMENSIONS (IS –2102)

DIAMETERS & LENGTHS	
UPTO & INCL. 6	+0.1
6 – 30	+0.2
30 – 120	+0.3
120 – 315	+0.5
315 – 1000	+0.8
1000 – 2000	+1.2
2000 – 4000	+2.0
4000 & ABOVE	+3.0

LENGTH IN M.M. OF SHORTER SIDE OF ANGLE UPTO & INCL.	
1– 6	± 1°–00'
6– 30	± 0°–30'
30–120	± 0°–20'
120–400	± 0°–10'

SPP

MATERIAL: PART TO BE PURCHASED AND ALTERED
FINISH:
DRAWN R.S
DRG.CHKD C.P.K.
APPROVED M.P.

TITLE FLEXIBLE GEAR COUPLING
FENNER SIZE - 4

SATISH DHAWAN SPACE CENTRE
SOLID PROPELLANT PLANT
I.S.R.O SRIHARIKOTA

PROJECTION

SCALE	DRG. NO.	DATE	SHEET
1 : 2	626-102-01-002-A3-R0	05.08.11	OF

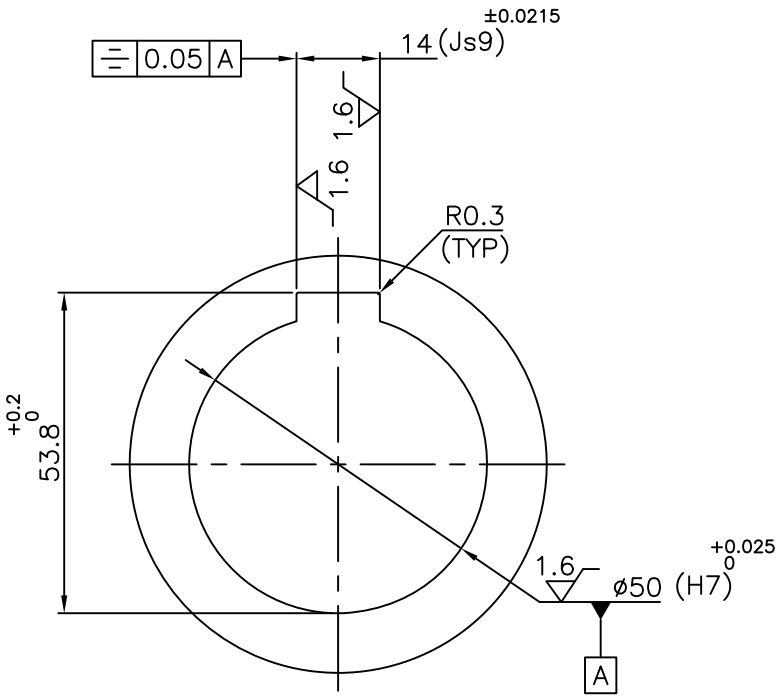

KEYWAY DETAIL–V1

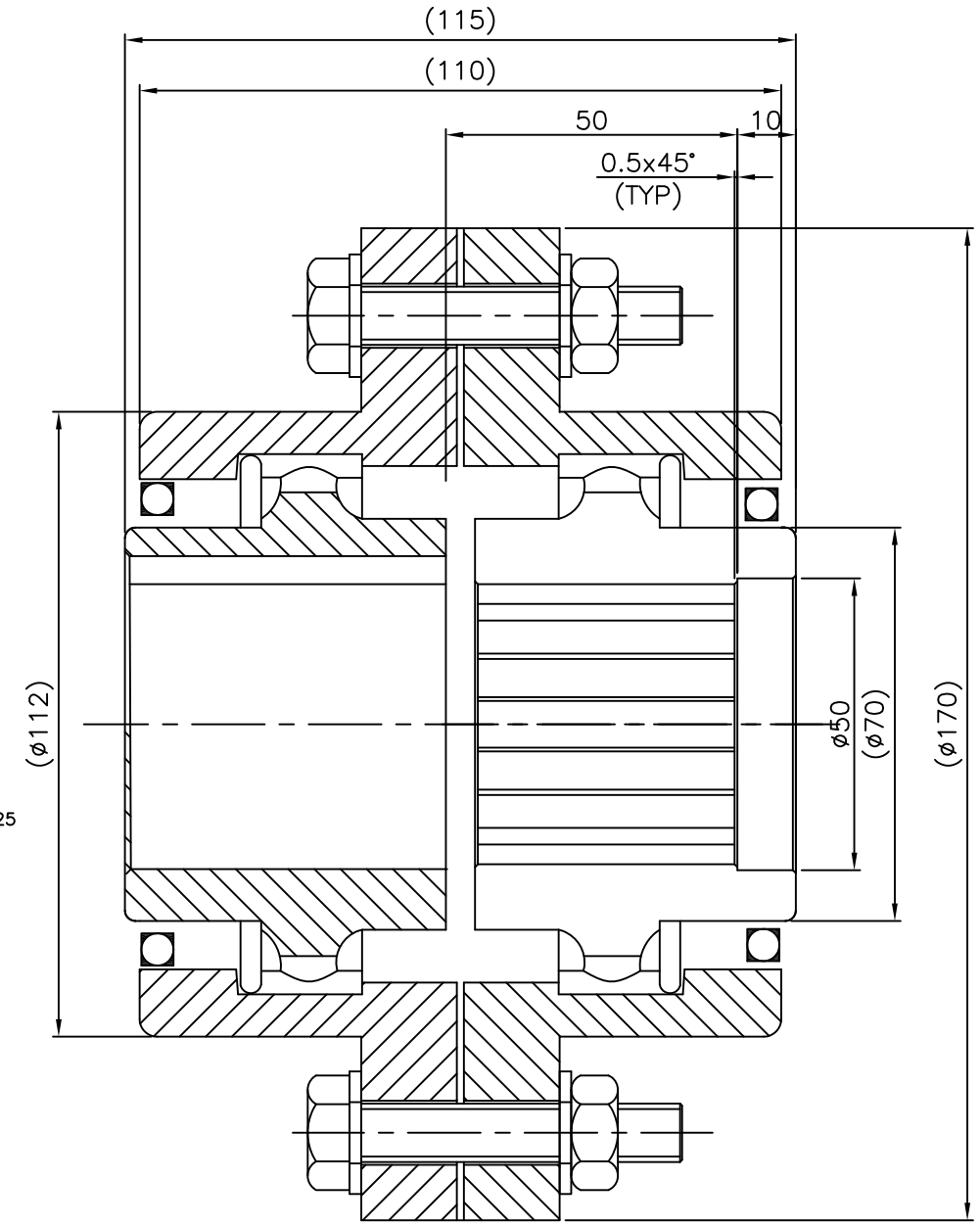

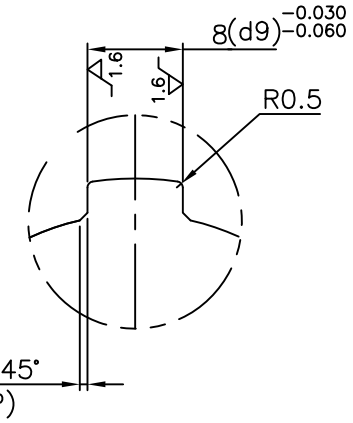

DETAIL D1

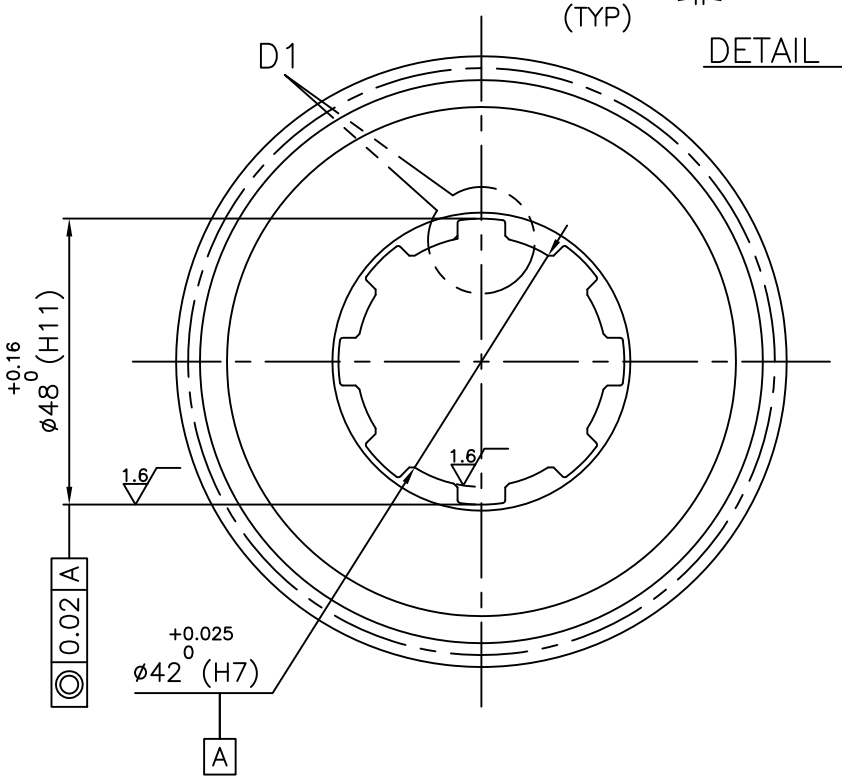

NOTES:

1. REMOVE ALL SHARP CORNERS AND BURRS.
2. INTERNAL SPILNES TO BE MANUFACTURE AS PER THE DIN 5463–A (A8 x 42 x 48)
3. PART TO BE MANUFACTURED TO SUIT HYDRAULIC MOTOR OF WORKING PLATFORM (EXTERNAL SPLINE)

DO NOT SCALE THE DRAWING
ASK IF IN DOUBT
UNLESS OTHERWISE SHOWN
ALL DIMENSIONS ARE IN MILLIMETERS
REMOVE SHARP EDGES & BURRS
CHAMFER 1 M.M. X 45°
MACHINING FINISH IN MICRONS :–
▽ 8 – 25 ▽▽ 1.6 – 8
▽▽▽ 0.025 – 1.6 ▽▽▽▽ < 0.025

DEVIATION FOR NON TOLERANCED DIMENSIONS (IS –2102)

DIAMETERS & LENGTHS	
UPTO & INCL. 6	+0.1
6 – 30	+0.2
30 – 120	+0.3
120 – 315	+0.5
315 – 1000	+0.8
1000 – 2000	+1.2
2000 – 4000	+2.0
4000 & ABOVE	+3.0

LENGTH IN M.M. OF SHORTER SIDE OF ANGLE UPTO & INCL.	
1– 6	± 1°–00'
6– 30	± 0°–30'
30–120	± 0°–20'
120–400	± 0°–10'

SPP

MATERIAL: PART TO BE PURCHASED AND ALTERED
FINISH:
DRAWN R.S
DRG.CHKD C.P.K.
APPROVED M.P.

TITLE FLEXIBLE GEAR COUPLING FENNER SIZE - 1

SATISH DHAWAN SPACE CENTRE
SOLID PROPELLANT PLANT
I.S.R.O SRIHARIKOTA

PROJECTION

SCALE	DRG. NO.	DATE	SHEET
1 : 1	626-102-01-003-A3-R0	05.08.11	OF

REF. DRG. NO.
COM. FILE NO.

REF. DRG. NO. 10-03-200-03-041/A1/R1
COM. FILE NO. SCEND/VR/M93/2005/A1/VKS

PART NO.	DESCRIPTION	MATERIAL	SPECIFICATION	QTY.
1	PLATE	IS:2062 Gr-B	510x547x30THK	01
2	PLATE	IS:2062 Gr-B	1100x830x20THK	02
3	PLATE	IS:2062 Gr-B	1115x280x20THK	02
4	PLATE	IS:2062 Gr-B	1020x800x20THK	01
5	RIB	IS:2062 Gr-B	800x500x20THK	02
6	RIB	IS:2062 Gr-B	500x134x20THK	04
7	PLATE	IS:2062 Gr-B	405x305x40THK	01
8	PLATE	IS:2062 Gr-B	255x210x20THK	01
9	PLATE	IS:2062 Gr-B	240x340x20THK	01
10	PLATE	IS:2062 Gr-B	870x275x20THK	01

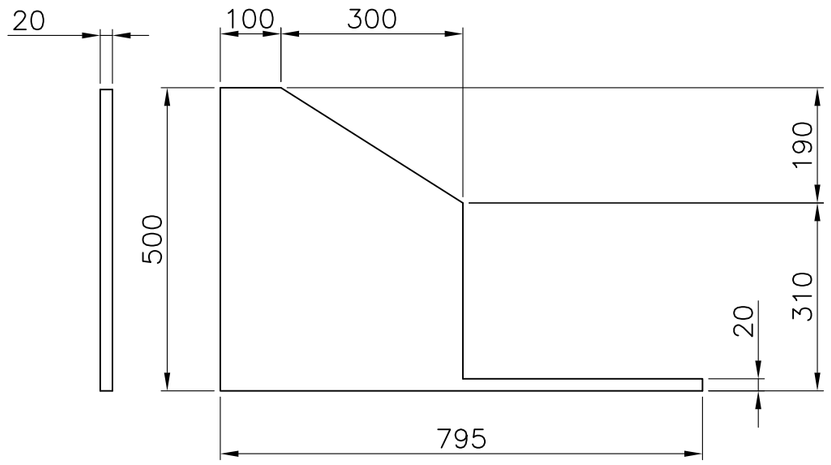

DETAIL OF ITEM No 5

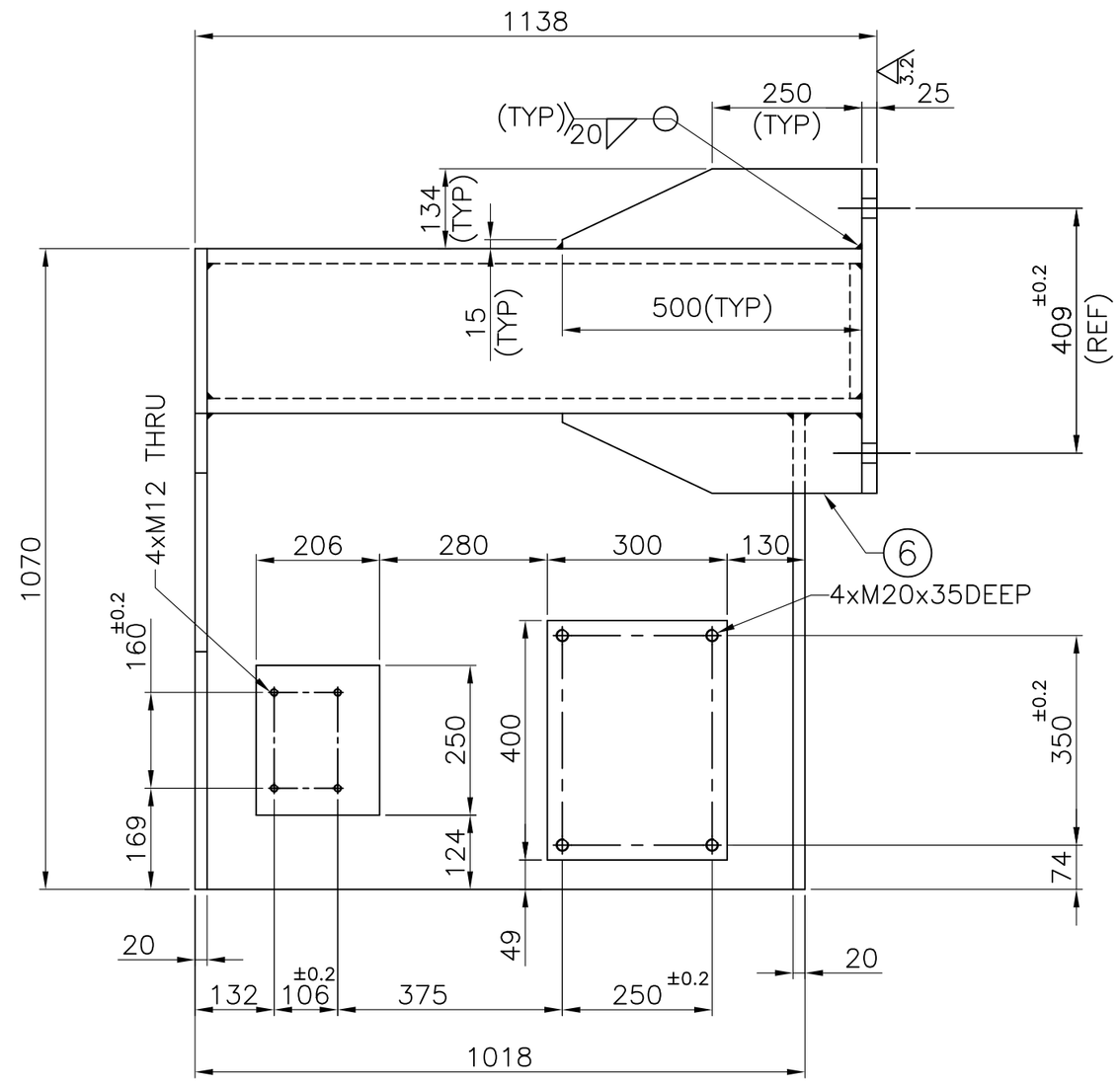

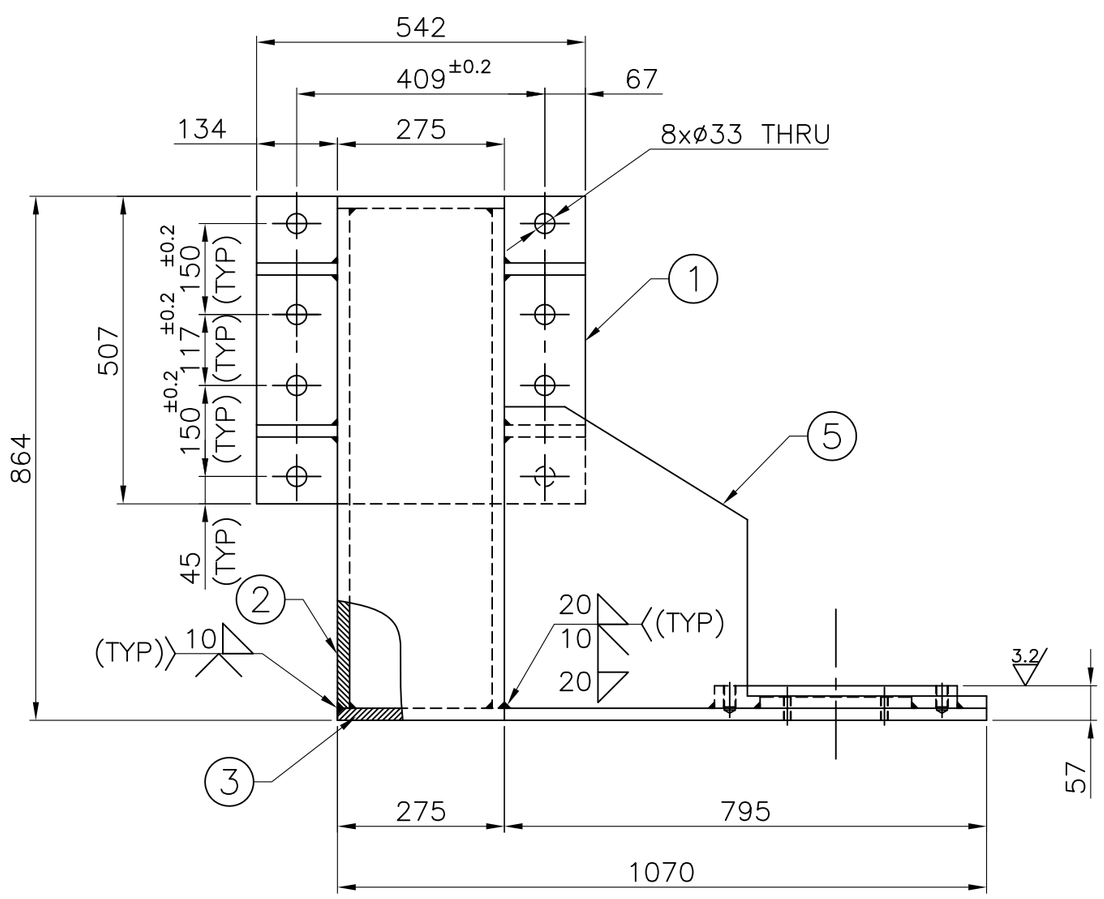

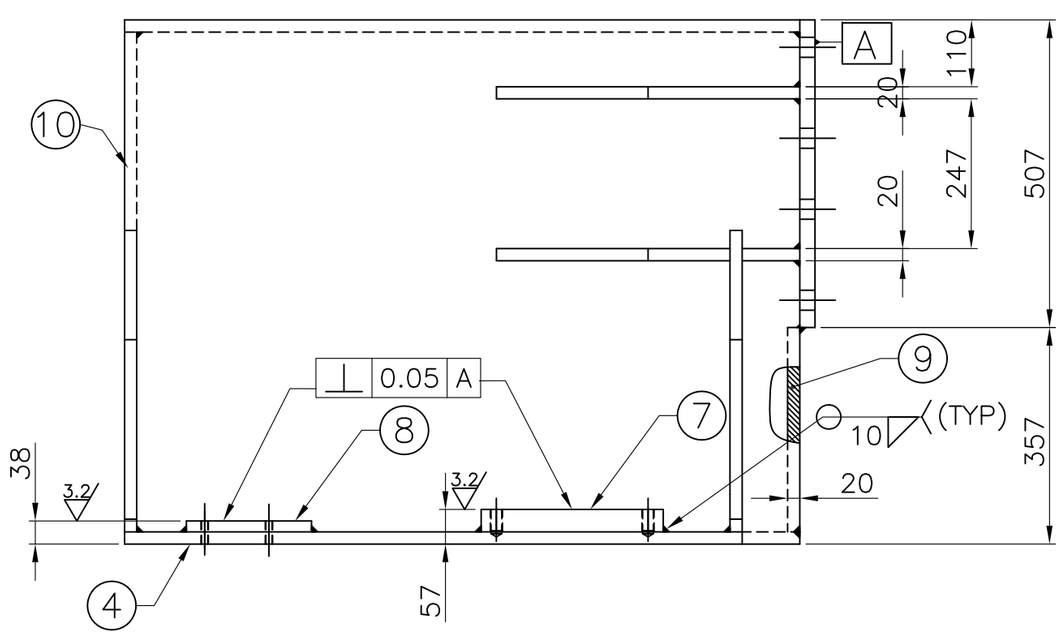

NOTES:

1. ALL STRUCTURAL WELDS SHALL BE CONTINUOUS AND FULL PENETRATION TYPE. AND WELD SHALL BE OF 20MM(MIN).
2. REMOVE ALL SHARP CORNERS AND BURRS.
3. TO BE A WELDED CONSTRUCTION.

DO NOT SCALE THE DRAWING
ASK IF IN DOUBT
UNLESS OTHERWISE SHOWN
ALL DIMENSIONS ARE IN MILLIMETERS
REMOVE SHARP EDGES & BURRS
CHAMFER 1 M.M. X 45°
MACHINING FINISH IN MICRONS :-
▽ 8 - 25 ▽▽ 1.6 - 8
▽▽▽ 0.025 - 1.6 ▽▽▽▽ < 0.025

DEVIATION FOR NON TOLERANCED DIMENSIONS (IS -2102)

DIAMETERS & LENGTHS	
UPTO & INCL. 6	+0.1
6 - 30	+0.2
30 - 120	+0.3
120 - 315	+0.5
315 - 1000	+0.8
1000 - 2000	+1.2
2000 - 4000	+2.0
4000 & ABOVE	+3.0

LENGTH IN M.M. OF SHORTER SIDE OF ANGLE UPTO & INCL.	
1- 6	± 1°-00'
6- 30	± 0°-30'
30-120	± 0°-20'
120-400	± 0°-10'

SPP

MATERIAL:	REF BOM
FINISH:	PAINTING
DRAWN	R.S
DRG.CHKD	C.P.K
APPROVED	M.P

TITLE: DRIVE MOUNTING BRACKET (RH)

SATISH DHAWAN SPACE CENTRE
SOLID PROPELLANT PLANT
I.S.R.O SRIHARIKOTA

PROJECTION

SCALE	DRG. NO.	DATE	SHEET
1 : 10	626-102-01-004-A2-R0	05.08.11	OF

PART NO.	DESCRIPTION	MATERIAL	SPECIFICATION	QTY.
1	PLATE	IS:2062	510x547x30THK	01
2	PLATE	IS:2062	1115x830x20THK	02
3	PLATE	IS:2062	1100x280x20THK	02
4	PLATE	IS:2062	1020x800x20THK	01
5	RIB	IS:2062	800x500x20THK	02
6	RIB	IS:2062	500x134x20THK	04
7	PLATE	IS:2062	405x305x40THK	01
8	PLATE	IS:2062	255x210x20THK	01
9	PLATE	IS:2062	240x340x20THK	01
10	PLATE	IS:2062	870x275x20THK	01

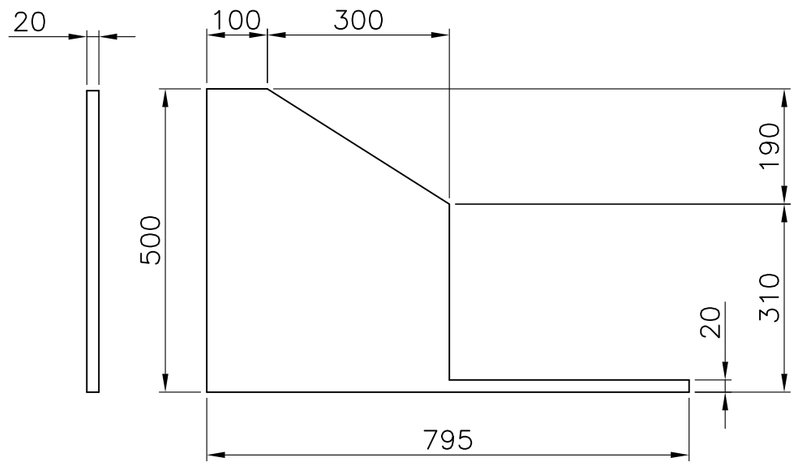

DETAIL OF ITEM No 5

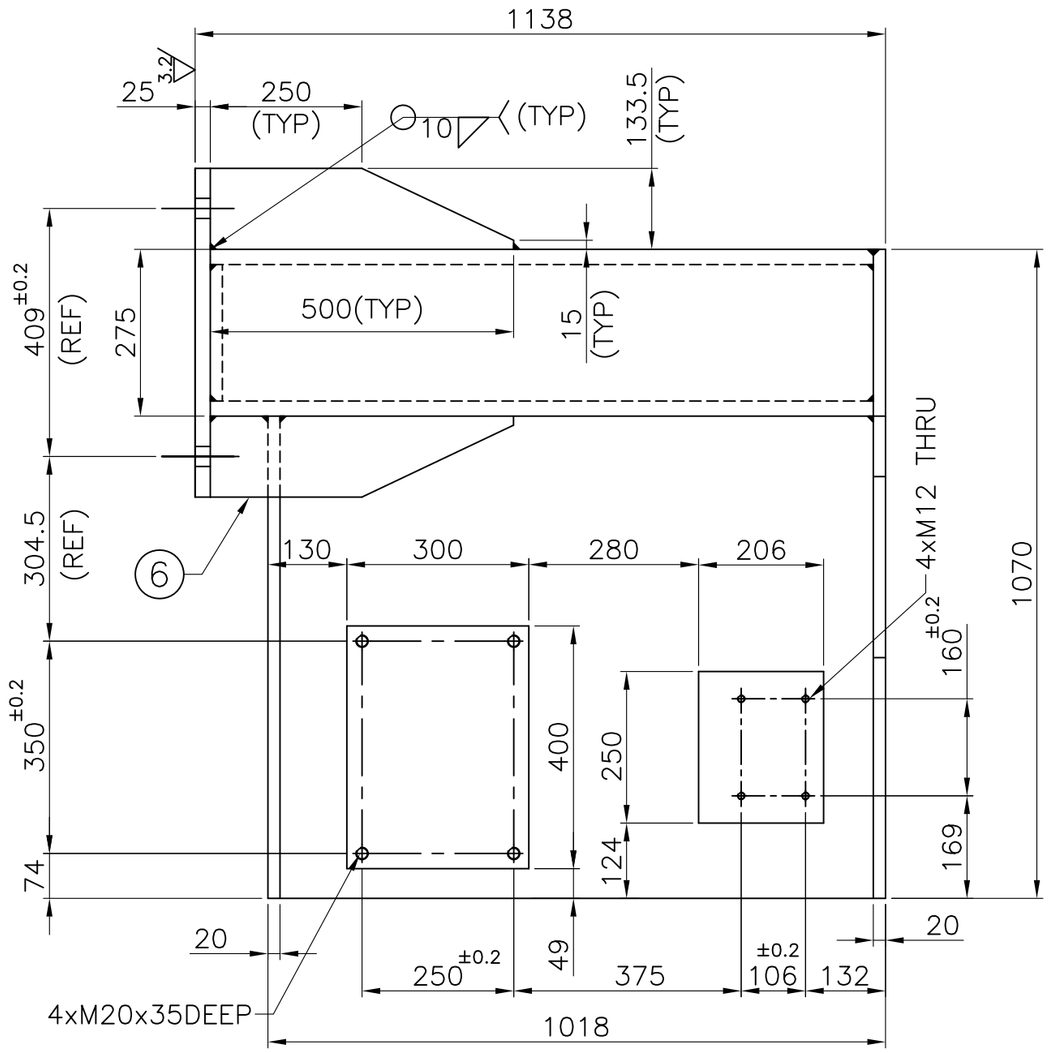

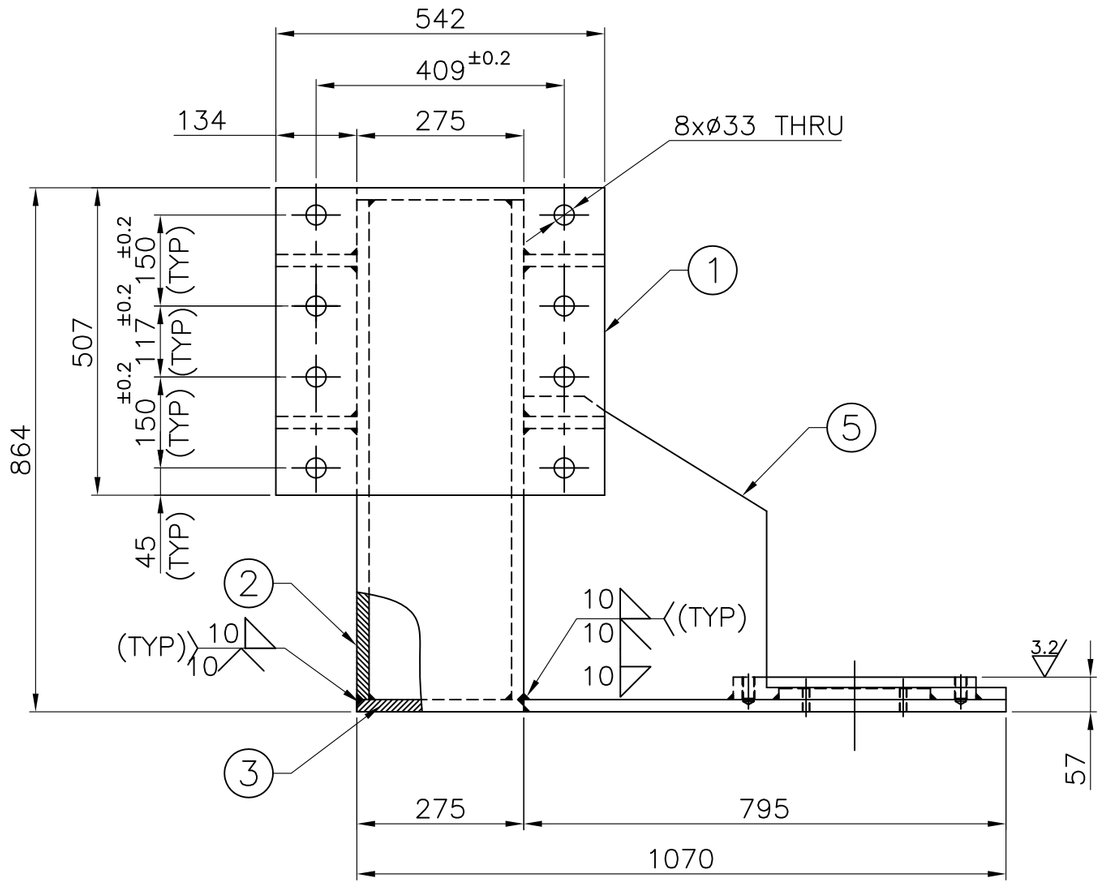

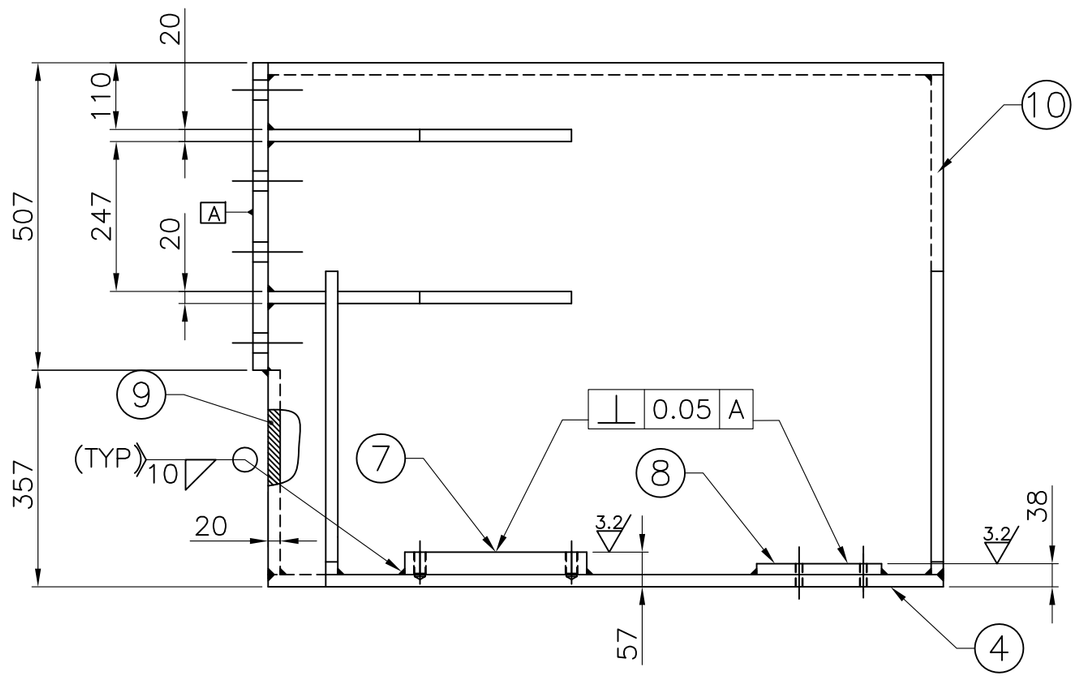

NOTES:

1. ALL STRUCTURAL WELDS SHALL BE CONTINUOUS AND FULL PENETRATION TYPE. AND WELD SHALL BE OF 20MM(MIN).
2. REMOVE ALL SHARP CORNERS AND BURRS.
3. TO BE A WELDED CONSTRUCTION.

DO NOT SCALE THE DRAWING
ASK IF IN DOUBT
UNLESS OTHERWISE SHOWN
ALL DIMENSIONS ARE IN MILLIMETERS
REMOVE SHARP EDGES & BURRS
CHAMFER 1 M.M. X 45°
MACHINING FINISH IN MICRONS :–
▽ 8 – 25 ▽▽ 1.6 – 8
▽▽▽ 0.025 – 1.6 ▽▽▽▽ < 0.025

DEVIATION FOR NON TOLERANCED DIMENSIONS (IS –2102)

DIAMETERS & LENGTHS	
UPTO & INCL. 6	+0.1
6 – 30	+0.2
30 – 120	+0.3
120 – 315	+0.5
315 – 1000	+0.8
1000 – 2000	+1.2
2000 – 4000	+2.0
4000 & ABOVE	+3.0

LENGTH IN M.M. OF SHORTER SIDE OF ANGLE UPTO & INCL.	
1– 6	± 1°–00'
6– 30	± 0°–30'
30–120	± 0°–20'
120–400	± 0°–10'

SPP

MATERIAL:	REF BOM
FINISH:	PAINTING
DRAWN	R.S
DRG.CHKD	C.P.K
APPROVED	M.P

TITLE

DRIVE MOUNTING BRACKET (LH)

SATISH DHAWAN SPACE CENTRE
SOLID PROPELLANT PLANT
I.S.R.O SRIHARIKOTA

PROJECTION

SCALE	DRG. NO.	DATE	SHEET
1 : 10	626-102-01-005-A2-R0	05.08.11	OF

REF. DRG. NO.
COM. FILE NO.

PART NO.	DESCRIPTION	MATERIAL	SPECIFICATION	QTY.
1	PLATE	IS:2062 Gr. B	350x255x16THK	01
2	PLATE	IS:2062 Gr. B	255x160x16THK	01
3	RIB	IS:2062 Gr. B	135x55x12THK	02

3.2 (1.6)

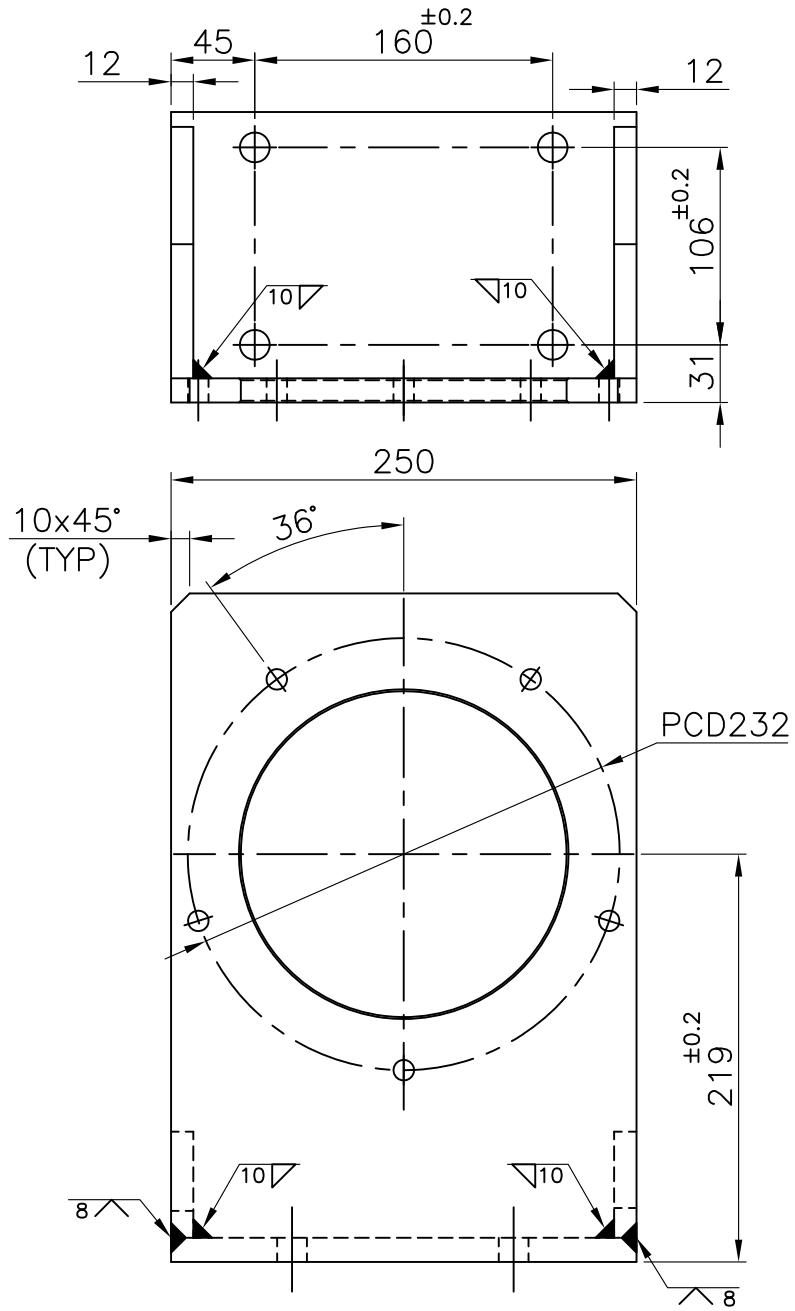

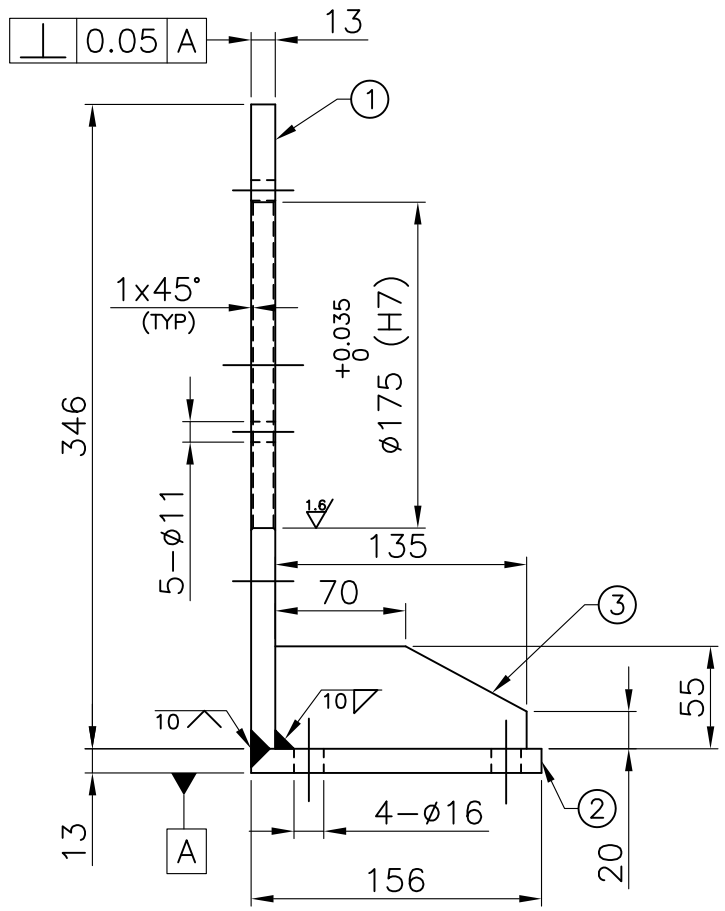

NOTES:

1. MATERIAL : REFER BOM
2. REMOVE ALL SHARP CORNERS AND BURRS.
3. TO BE A WELDED CONSTRUCTION.
4. ALL WELDING SHALL BE STRICTLY AS PER THE ABOVE MENTIONED SPECIFICTION NO. DOCUMENT.
5. ALL STRUCTURAL WELD SHALL BE CONTINUOUS AND FULL PENETRATION TYPE.
6. THE WELDS SHALL BE DULY INSPECTED BY DP TESTING.
7. BORES AND MACHINED SURFACE SHALL BE MASKED DURING THE PAINTING PROCESS.
7. ø 175 BORE SHALL BE CARRIED OUT AFTER FABRICATION.

DO NOT SCALE THE DRAWING
ASK IF IN DOUBT
UNLESS OTHERWISE SHOWN
ALL DIMENSIONS ARE IN MILLIMETERS
REMOVE SHARP EDGES & BURRS
CHAMFER 1 M.M. X 45°
MACHINING FINISH IN MICRONS :-
▽ 8 – 25 ▽▽ 1.6 – 8
▽▽▽ 0.025 – 1.6 ▽▽▽▽ < 0.025

DEVIATION FOR NON TOLERANCED DIMENSIONS (IS –2102)

DIAMETERS & LENGTHS	
UPTO & INCL. 6	+0.1
6 – 30	+0.2
30 – 120	+0.3
120 – 315	+0.5
315 – 1000	+0.8
1000 – 2000	+1.2
2000 – 4000	+2.0
4000 & ABOVE	+3.0

LENGTH IN M.M. OF SHORTER SIDE OF ANGLE UPTO & INCL.	
1– 6	± 1°–00'
6– 30	± 0°–30'
30–120	± 0°–20'
120–400	± 0°–10'

SPP

MATERIAL:	REF BOM
FINISH:	PAINTING
DRAWN	R.S
DRG.CHKD	C.P.K.
APPROVED	M.P.

TITLE: HYDRAULIC MOTOR MOUNTING BRACKET

SATISH DHAWAN SPACE CENTRE
SOLID PROPELLANT PLANT
I.S.R.O SRIHARIKOTA

PROJECTION

SCALE	DRG. NO.	DATE	SHEET
1 : 4	626-102-01-006-A3-R0	05.08.11	OF

REF. DRG. NO.
COM. FILE NO.

PART NO.	DESCRIPTION	MATERIAL	SPECIFICATION	QTY.
1	MAIN BEAM WORKING PLATFORM	REFER DWG.	626-102-02-002-A1-R0	01
2	WORKING PLATFORM TRUCK (RH)	REFER DWG.	626-102-02-003-A2-R0	01
3	WORKING PLATFORM TRUCK (LH)	REFER DWG.	626-102-02-004-A2-R0	01
151	HEX. SOC. HEAD CAP SCREW	IS:2269-1967	M20 x 40	32

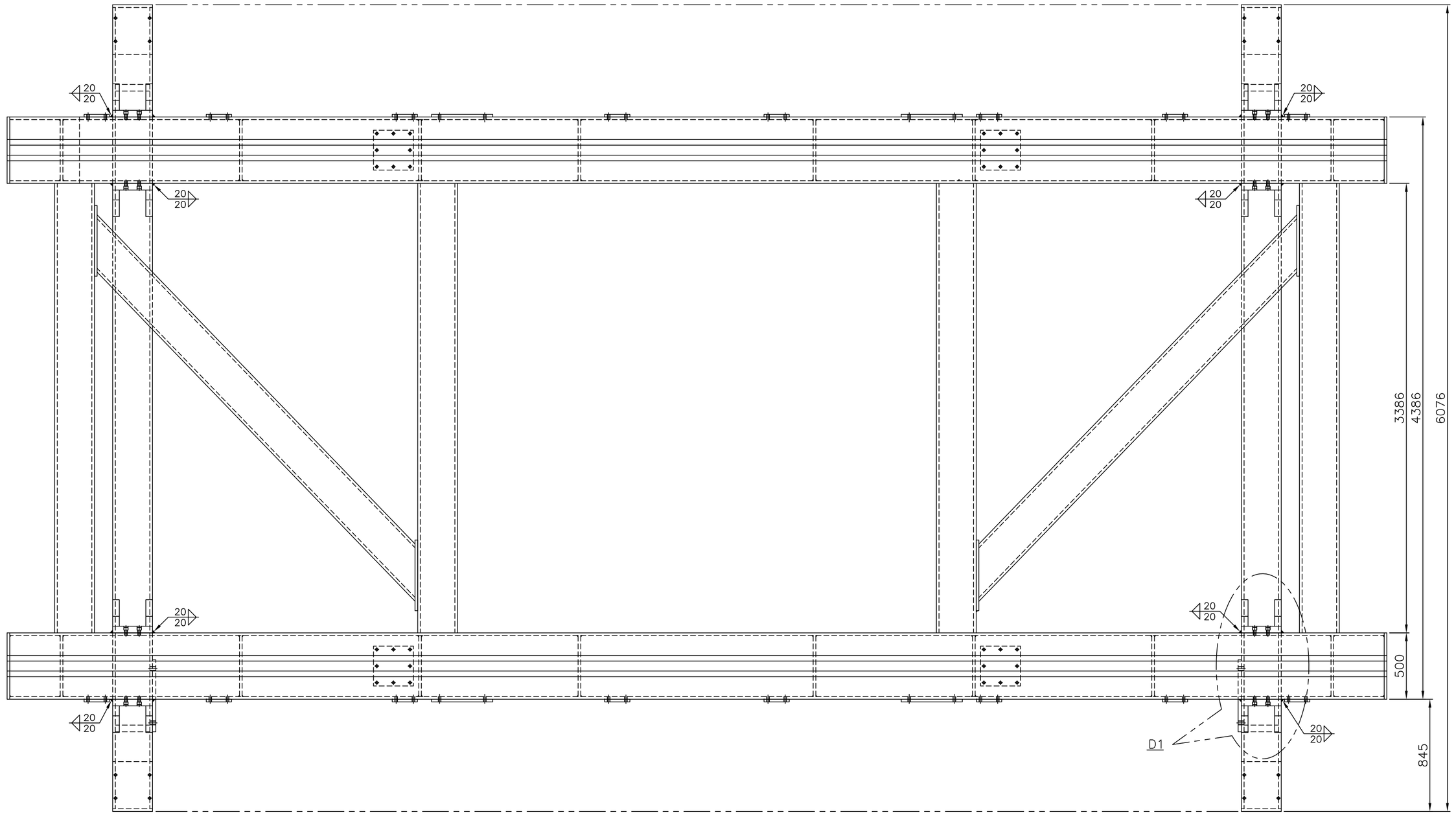

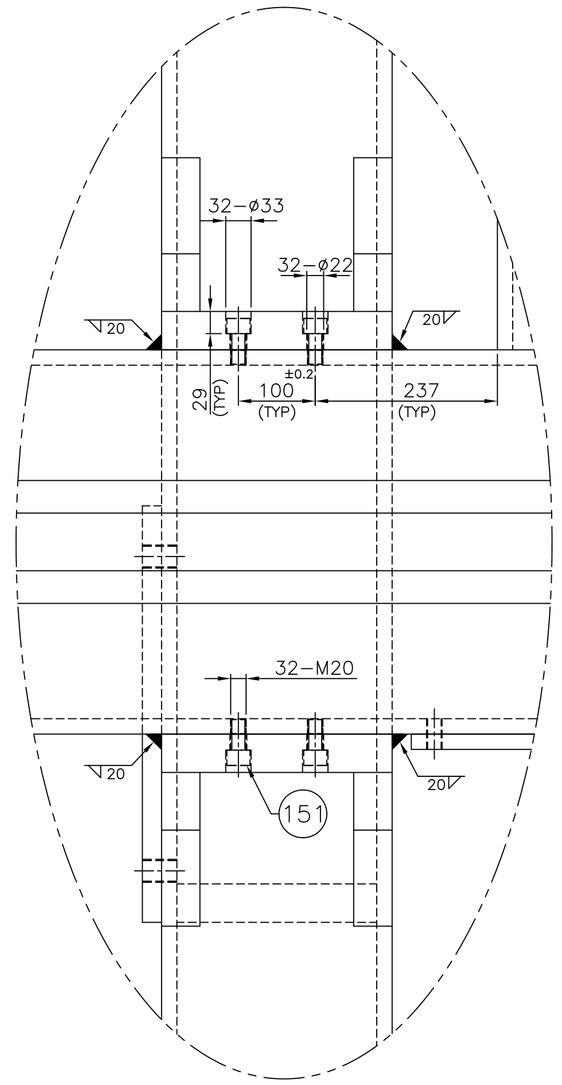

DETAIL D1 AT 4 PLACES

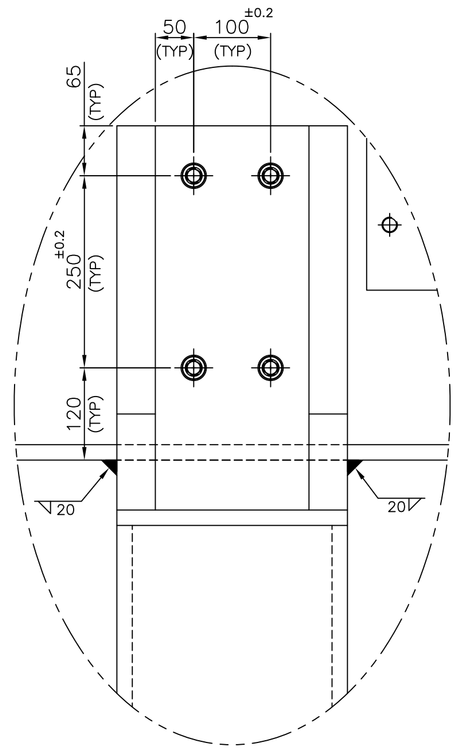

DETAIL D2 AT 4 PLACES

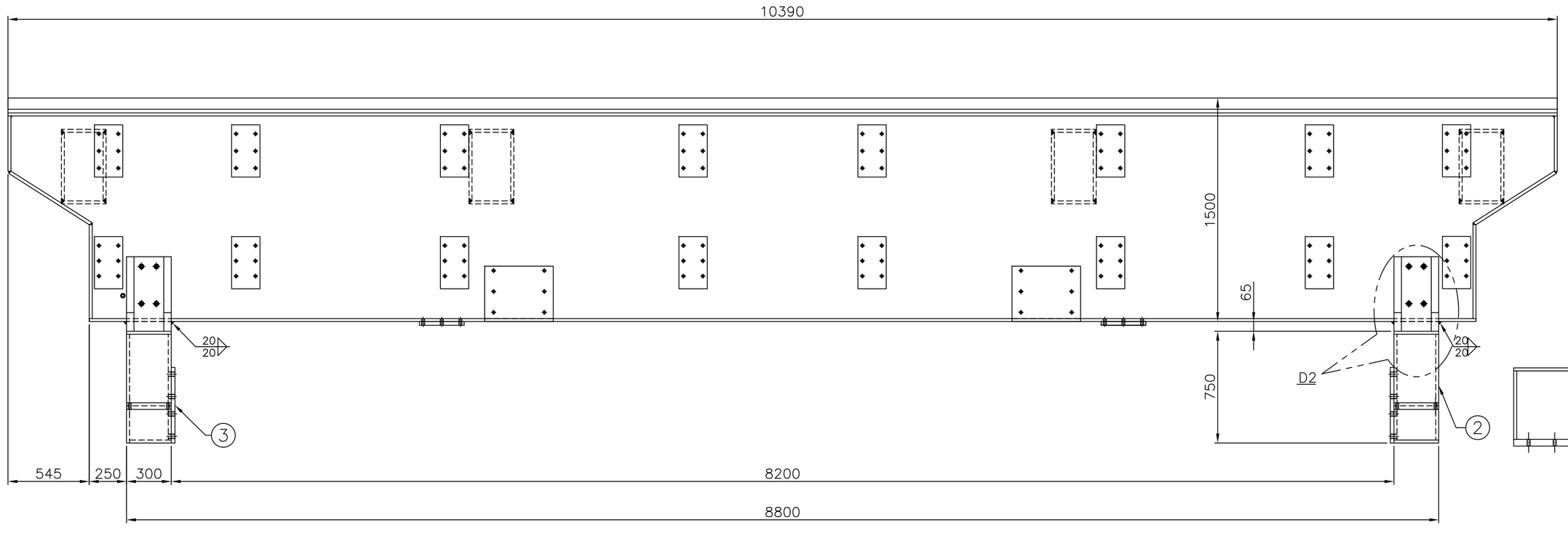

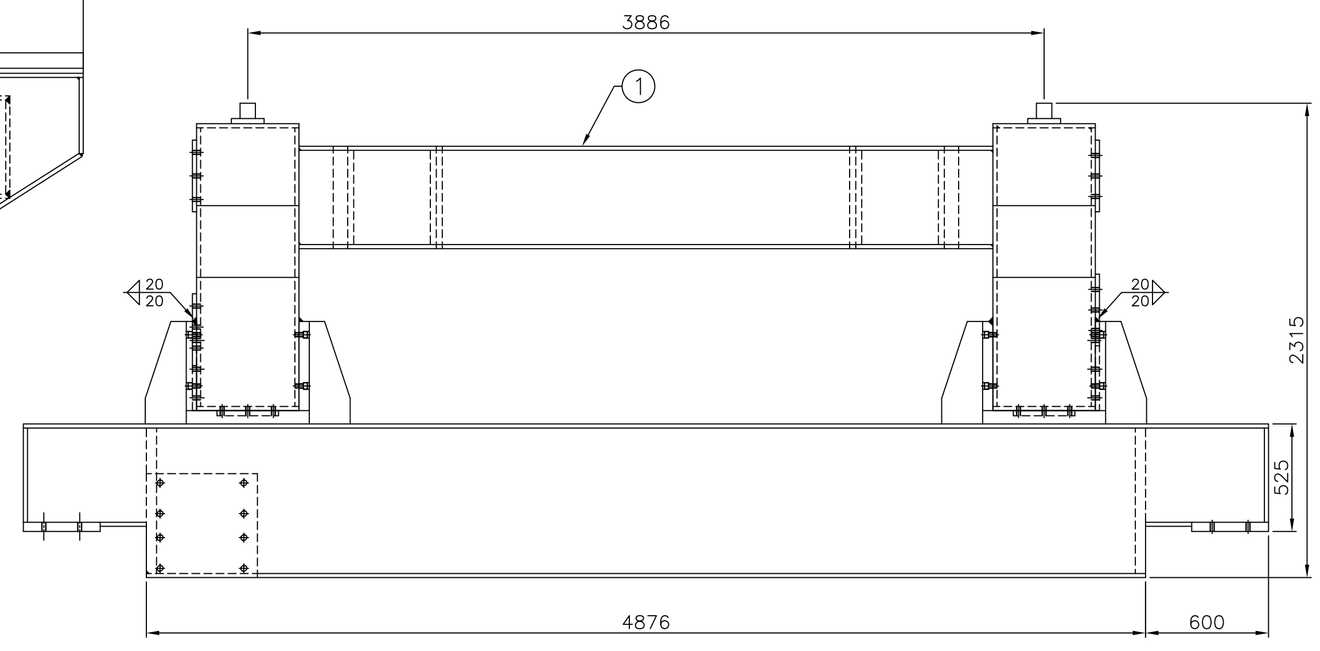

NOTES:

1. REMOVE ALL SHARP CORNERS AND BURRS.
2. TO BE A WELDED CONSTRUCTION.
3. THE MAIN BEAM OF WORKING PLATFORM (626-102-02-002-R0) IS KEPT IN THE SLOT FORMED ON THE WORKING PLATFORM TRUCK (626-102-02-003-R0 & 626-102-02-004-R0).
4. THE MAIN BEAM TO BE HELD BY SCREWS AND IT IS ALIGNED SO THAT THE ASSEMBLY IS FREE FROM SKEW AND IS LEVEL. SHIMS MAY BE USED FOR THE ALIGNMENT.
5. AFTER ALIGNMENT, THE WORKING PLATFORM MAIN BEAM TO BE WELDED TO WORKING PLATFORM TRUCKS.
6. ALL WELDING SHALL BE STRICTLY AS PER THE ABOVE MENTIONED SPECIFICTION NO. DOCUMENT.
7. PAINTING SHALL BE DONE AS PER THE TENDER DOCUMENT.

DO NOT SCALE THE DRAWING
ASK IF IN DOUBT
UNLESS OTHERWISE SHOWN
ALL DIMENSIONS ARE IN MILLIMETERS
REMOVE SHARP EDGES & BURRS
CHAMFER 1 M.M. X 45°
MACHINING FINISH IN MICRONS :-
▽ 8 - 25 ▽▽ 1.6 - 8
▽▽▽ 0.025 - 1.6 ▽▽▽▽ < 0.025

DEVIATION FOR NON TOLERANCED DIMENSIONS (IS -2102)

DIAMETERS & LENGTHS	
UPTO & INCL. 6	+0.1
6 - 30	+0.2
30 - 120	+0.3
120 - 315	+0.5
315 - 1000	+0.8
1000 - 2000	+1.2
2000 - 4000	+2.0
4000 & ABOVE	+3.0

LENGTH IN M.M. OF SHORTER SIDE OF ANGLE UPTO & INCL.	
1- 6	± 1°-0'
6- 30	± 0°-30'
30-120	± 0°-20'
120-400	± 0°-10'

SPP

MATERIAL:	REF. B.O.M
FINISH:	PAINTING
DRAWN	R.S
DRG.CHKD	C.P.K.
APPROVED	M.P.

TITLE: MAIN BEAM & TRUCK ASSEMBLY

SATISH DHAWAN SPACE CENTRE
SOLID PROPELLANT PLANT
I.S.R.O SRIHARIKOTA

PROJECTION

SCALE	DRG. NO.	DATE	SHEET
1 : 20	626-102-02-001-A1-R0	05.08.11	OF

REF. DRG. NO.
COM. FILE NO.

REF. DRG. NO.

COM. FILE NO.

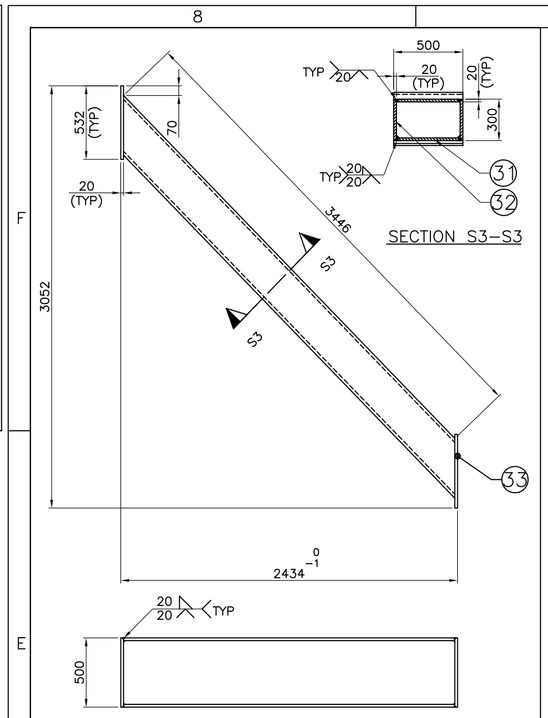

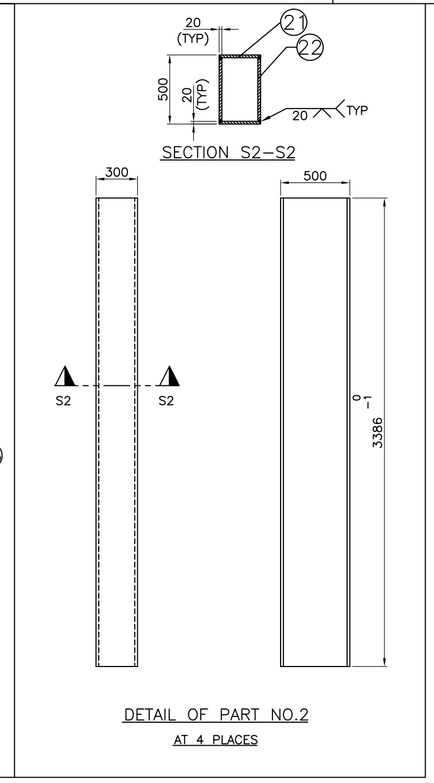

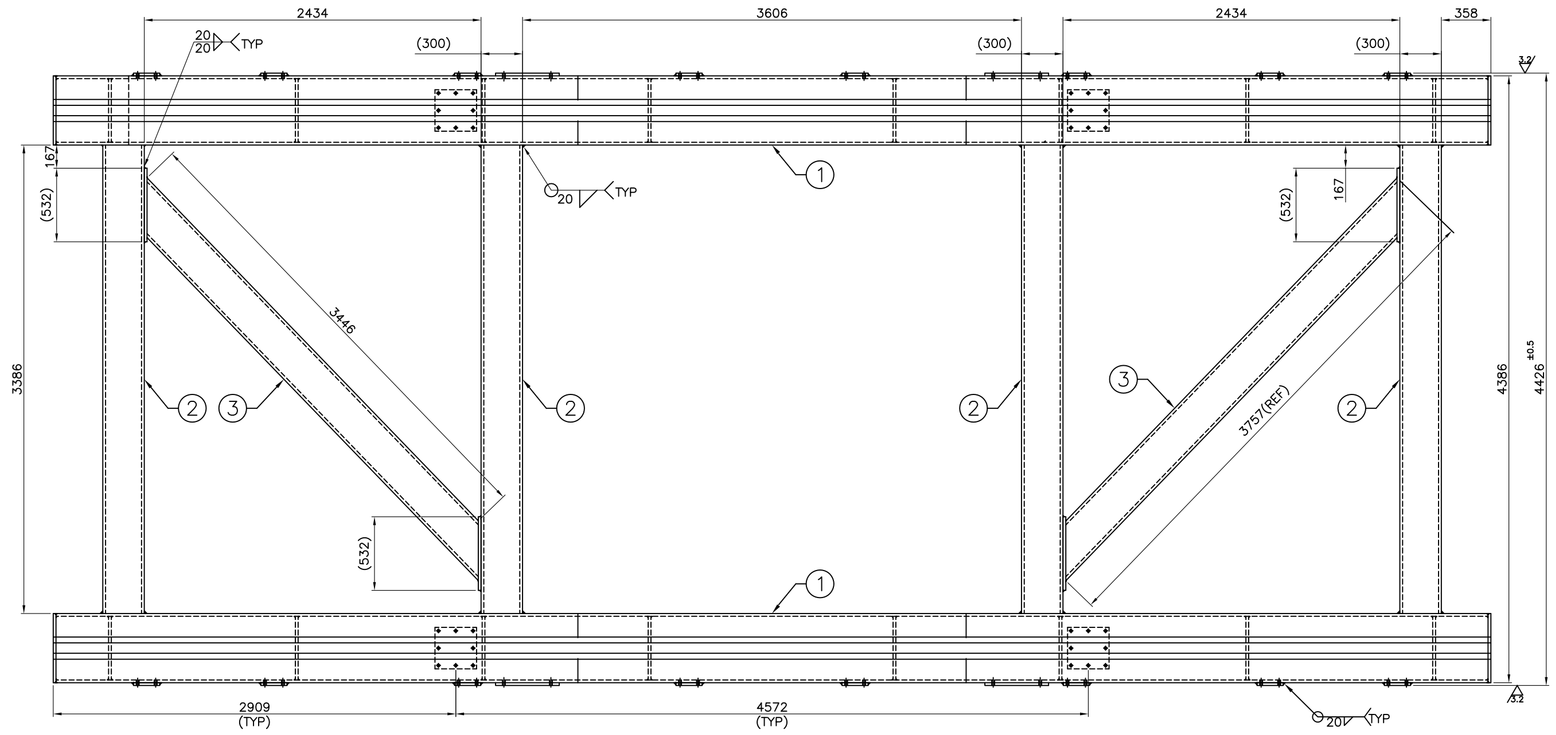

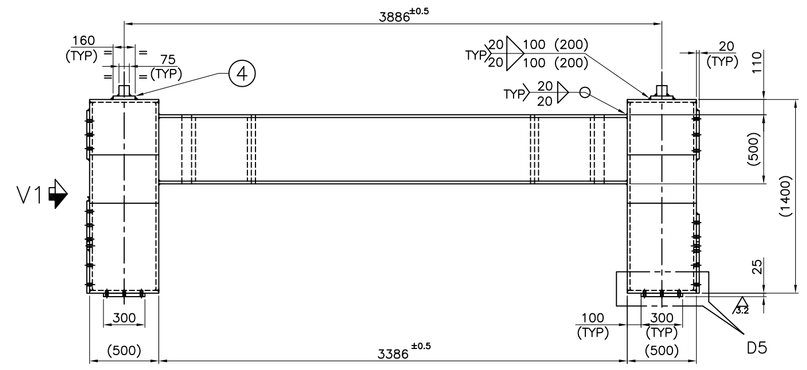

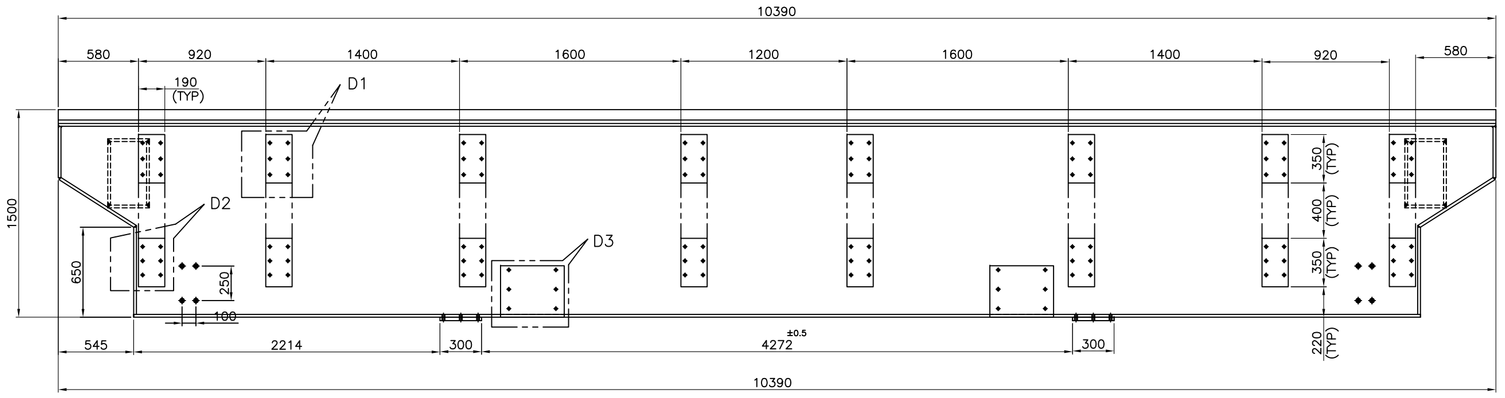

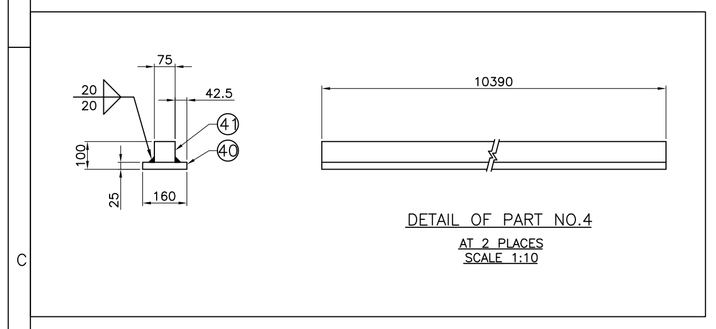

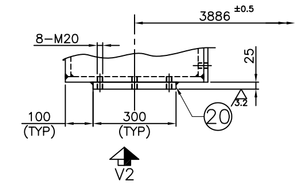

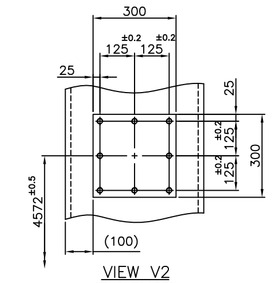

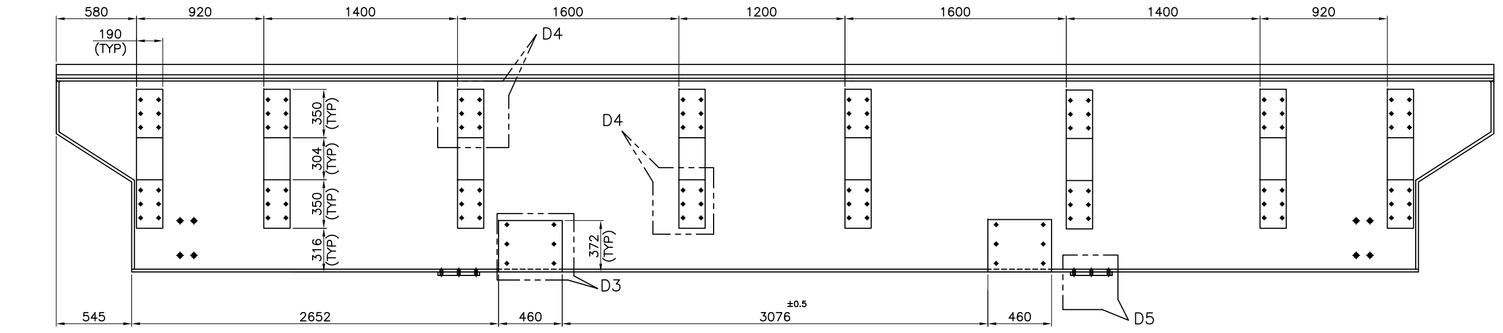

PART NO.	DESCRIPTION	MATERIAL	QTY.
1	BEAM	IS:2062 Gr–B	02
2	INTERCONNECTING MEMBER	IS:2062 Gr–B	04
3	CROSS CONNECTING MEMBER	IS:2062 Gr–B	02
4	RAIL BAR(STRIP)	IS:2062 Gr–B	02
11	PLATE	IS:2062 Gr–B	10400x505x20 THK. 01
12	PLATE	IS:2062 Gr–B	10360x1365x20 THK. 02
13	PLATE	IS:2062 Gr–B	505x380x20 THK. 02
14	PLATE	IS:2062 Gr–B	1360x460x20 THK. 06
15	PLATE	IS:2062 Gr–B	630x505x20 THK. 02
16	PLATE	IS:2062 Gr–B	640x505x20 THK. 02
17	PLATE	IS:2062 Gr–B	9305x505x20 THK. 01
18	PLATE	IS:2062 Gr–B	355x195x25 THK. 16
19	PLATE	IS:2062 Gr–B	465x380x25THK. 02
20	PLATE	IS:2062 Gr–B	305x305x30 THK. 02
23	PLATE	IS:2062 Gr–B	625x465x20 THK. 02
21	PLATE	IS:2062 Gr–B	3395x305x20 THK. 08
22	PLATE	IS:2062 Gr–B	3395x465x20 THK. 08
31	PLATE	IS:2062 Gr–B	3455x465x20 THK. 04
32	PLATE	IS:2062 Gr–B	3760x305x20 THK. 04
33	PLATE	IS:2062 Gr–B	540x305x20 THK. 04
40	PLATE	IS:2062 Gr–B	10400x150x25 THK. 02
41	BLOCK	IS:2062 Gr–B	10400x75x75 THK. 02

NOTES:

1. WEIGHT : 20436 Kgs.
2. QTY/ASSY. : 01No.
3. REMOVE ALL SHARP CORNERS AND BURRS.
4. ALL STRUCTURAL WELDS SHALL BE CONTINUOUS AND FULL PENETRATION TYPE. AND WELD SHALL BE OF 20MM(MIN).
5. WHERE PLATES ARE JOINED TO FORM LONGER LENGTHS THAN AVAILABLE AS RAW STOCK THE WELDS SHALL BE FULL PENETRATION DOUBLE BUTT AND SHALL BE RADIOGRAPHICALLY INSPECTED TO ENSURE HOMOGENEOUS COMPOSITION OF THE WELD MATERIAL AND FREEDOM FROM WELD DEFECTS LIKE POROSITY, CRACKS, ETC.
6. CROSS WELDING SHALL NOT BE PERMITTED FOR THE MAIN SIDE PLATES.
7. BAFFLE PLATES SHALL BE WELDED TO THE SIDE PLATES TO FORM THE MAIN BEAMS OF THE STRUCTURE. TOP PLATE SHALL BE JOINED TO THE SIDE PLATES AND TO BAFFLE PLATES WITH FULL DEPTH WELD.
8. THE BOTTOM PLATE OF THE BEAM SHALL BE USED AS THE LAST COVER PLATE. THE BOTTOM PLATE SHALL BE JOINED TO THE SIDE PLATES WITH CONTINUOUS FULL PENETRATION BEVEL+FILLET WELDS.
9. THE TWO BEAMS SHALL BE JOINED BY WELDING THE INTERCONNECTING MEMBERS SO THAT THE BEAMS ARE PARALLEL WITHIN 2 MM IN HORIZONTAL AND VERTICAL DIRECTIONS.
10. ALL PADS FOR MOUNTING SUB–ASSEMBLIES SHALL BE MACHINED.
11. THE SIDE WALLS OF THE TRUCK STRUCTURE SHALL BE MADE EVEN AND FLAT FOR MOUNTING ATTACHMENTS. THERE SHALL BE NO PROJECTIONS, WELD DROPS AND OTHER OBSTRUCTIONS ON THE SIDE WALLS.

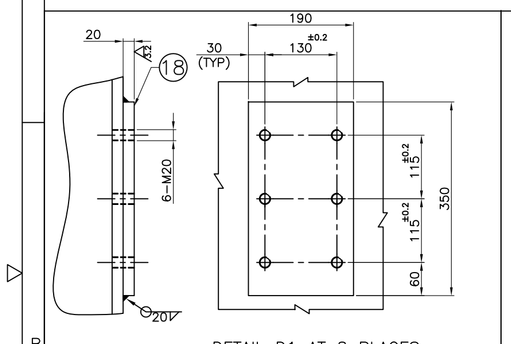

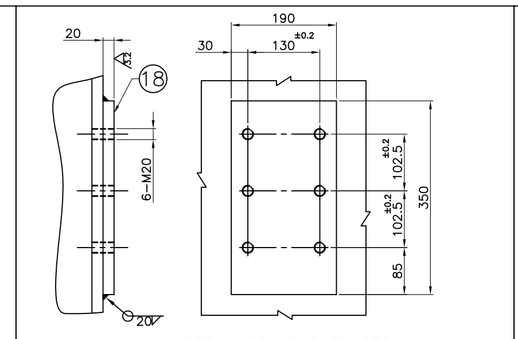

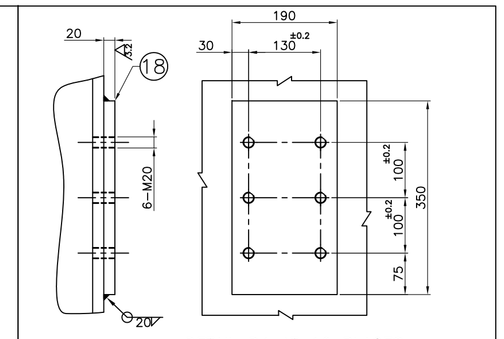

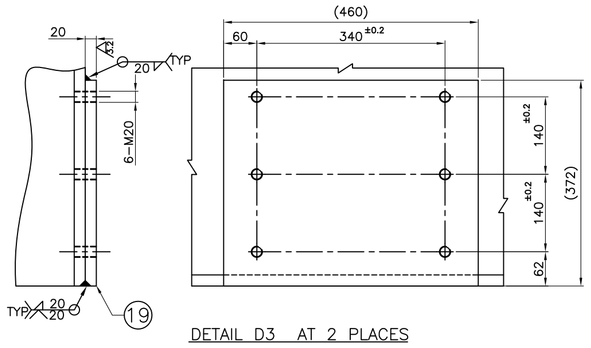

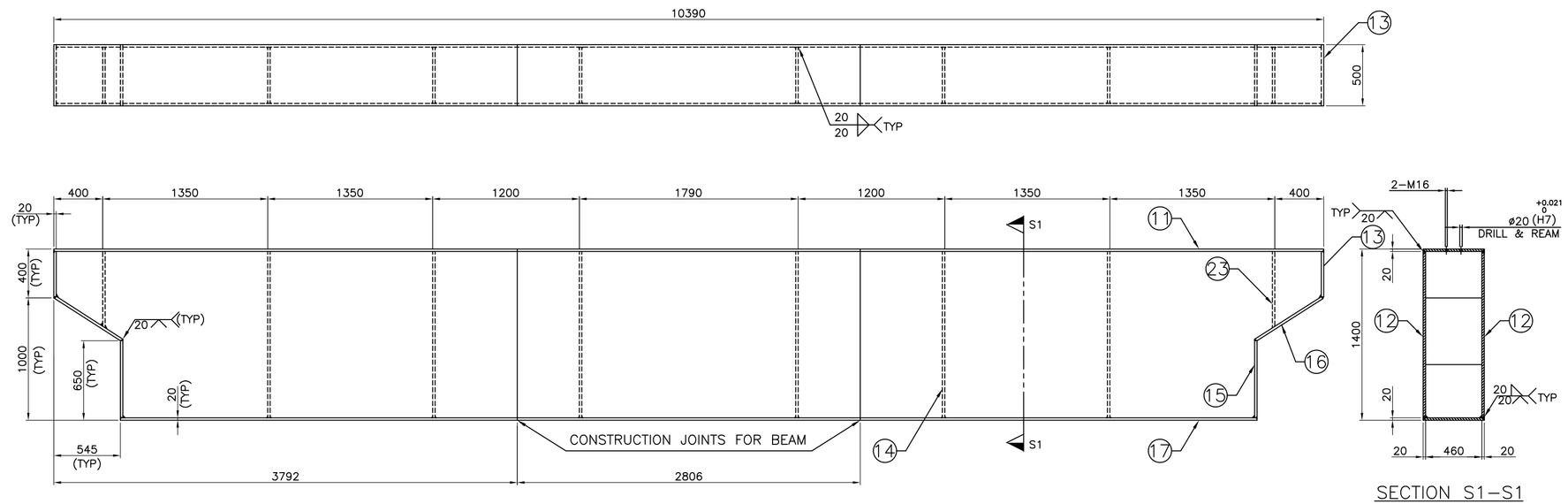

DO NOT SCALE THE DRAWING
ASK IF IN DOUBT
UNLESS OTHERWISE SHOWN
ALL DIMENSIONS ARE IN MILLIMETERS
REMOVE SHARP EDGES & BURRS
CHAMFER 1 M.M. X 45°
MACHINING FINISH IN MICRONS :–
▽ 8 – 25 ▽▽ 1.6 – 8
▽▽▽ 0.025 – 1.6 ▽▽▽▽ < 0.025

DEVIATION FOR NON TOLERANCED DIMENSIONS (IS –2102)

DIAMETERS & LENGTHS	
UPTO & INCL. 6	+0.1
6 – 30	+0.2
30 – 120	+0.3
120 – 315	+0.5
315 – 1000	+0.8
1000 – 2000	+1.2
2000 – 4000	+2.0
4000 & ABOVE	+3.0

LENGTH IN M.M. OF SHORTER SIDE OF ANGLE UPTO & INCL.	
1– 6	± 1°–00′
6– 30	± 0°–30′
30–120	± 0°–20′
120–400	± 0°–10′

SPP

TITLE: MAIN BEAM WORKING PLATFORM

MATERIAL: REF BOM

FINISH: PAINTING

DRAWN: R.S

DRG.CHKD: C.P.K.

APPROVED: M.P.

SATISH DHAWAN SPACE CENTRE
SOLID PROPELLANT PLANT
I.S.R.O SRIHARIKOTA

PROJECTION

SCALE 1 : 31

DRG. NO. 626-102-02-002-A1-R0

DATE 05.08.11

SHEET OF

REF. DRG. NO.
COM. FILE NO.

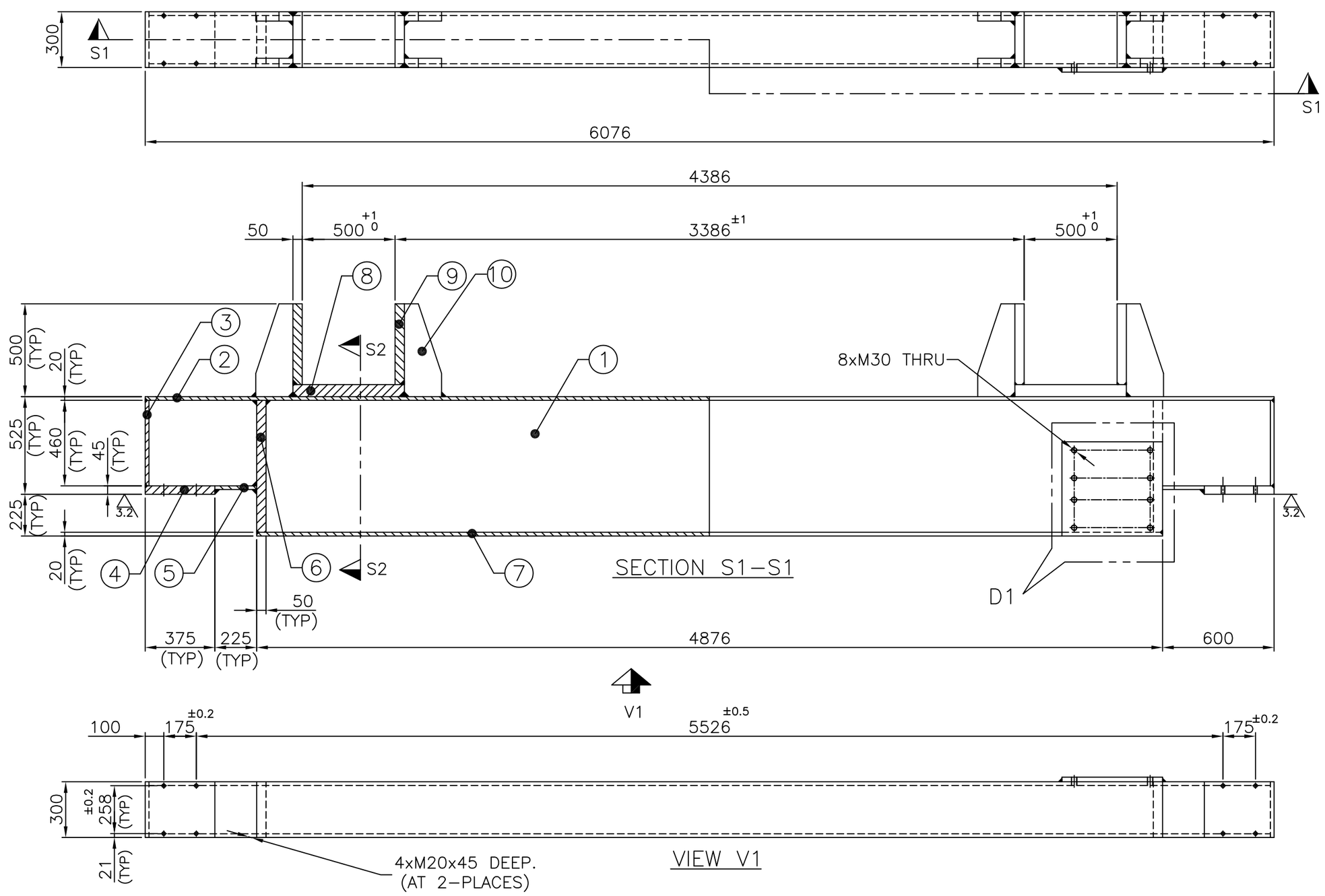

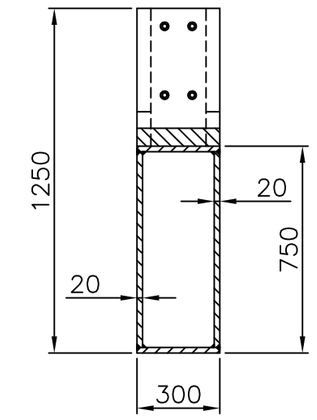

SECTION S2–S2

ITEM NO.	DESCRIPTION	MATERIAL	SPECIFICATION	QTY.
1	PLATE	IS:2062 Gr–B	6045x715x20 THK.	02
2	PLATE	IS:2062 Gr–B	6086x305x20 THK.	01
3	PLATE	IS:2062 Gr–B	465x305x20 THK.	02
4	PLATE	IS:2062 Gr–B	380x305x50 THK.	02
5	PLATE	IS:2062 Gr–B	305x230x20 THK.	02
6	PLATE	IS:2062 Gr–B	715x265x50 THK.	02
7	PLATE	IS:2062 Gr–B	4886x305x20 THK.	01
8	PLATE	IS:2062 Gr–B	605x305x65 THK.	02
9	PLATE	IS:2062 Gr–B	440x305x50 THK.	04
10	PLATE	IS:2062 Gr–B	500x200x50 THK.	08
11	PLATE	IS:2062 Gr–B	547x512x30 THK.	01

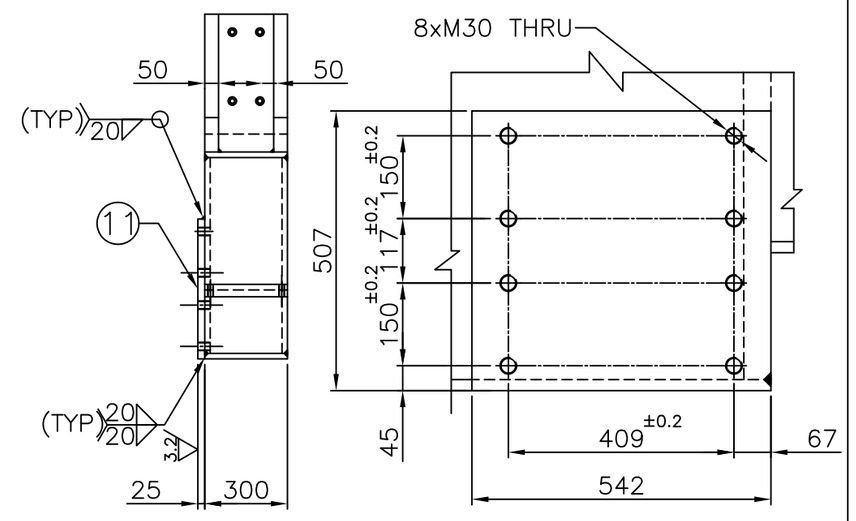

DETAIL D1
SCALE 1:10

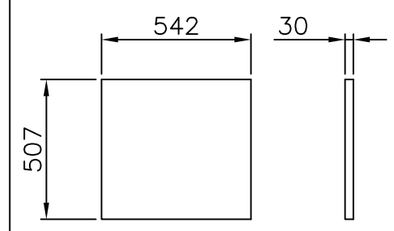

DETAIL OF ITEM NO:11

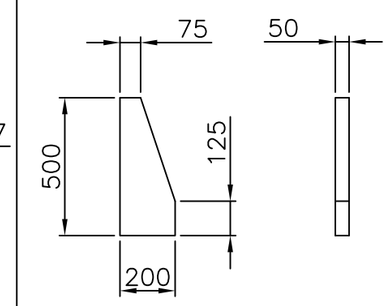

DETAIL OF ITEM NO:10

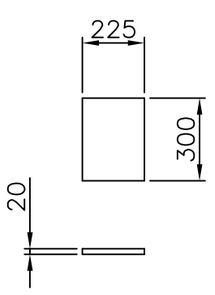

DETAIL OF ITEM NO:5

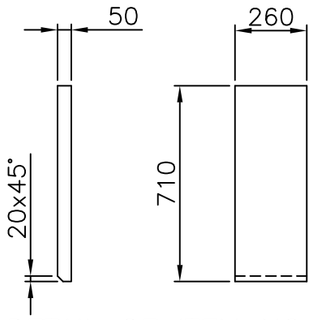

DETAIL OF ITEM NO:6

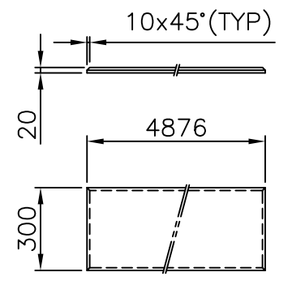

DETAIL OF ITEM NO:7

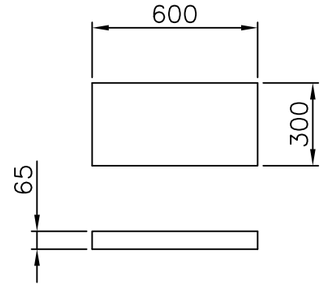

DETAIL OF ITEM NO:8

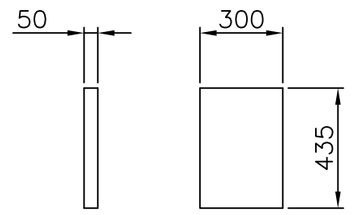

DETAIL OF ITEM NO:9

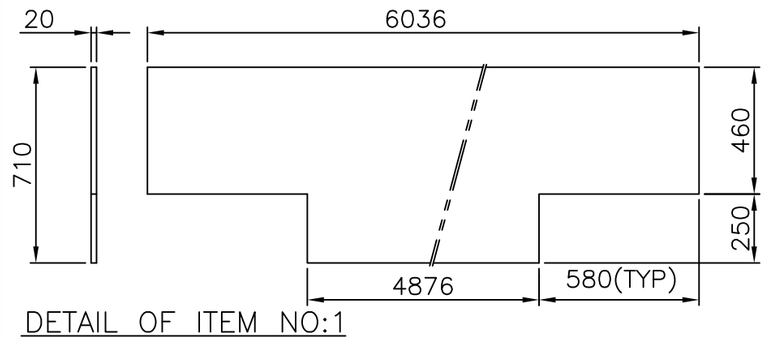

DETAIL OF ITEM NO:1

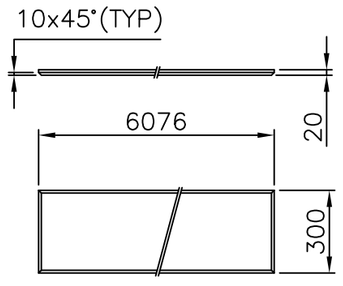

DETAIL OF ITEM NO:2

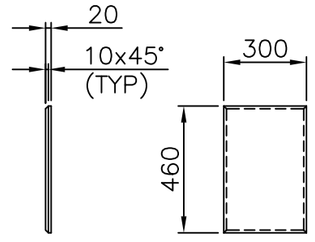

DETAIL OF ITEM NO:3

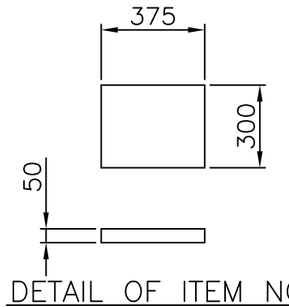

DETAIL OF ITEM NO:4

NOTES:

1. WEIGHT : 3266Kgs.
2. QTY/ASSY. : 01No.
3. ALL STRUCTURAL WELDS SHALL BE CONTINUOUS AND FULL PENETRATION TYPE. AND WELD SHALL BE OF 20MM(MIN).
4. REMOVE ALL SHARP CORNERS AND BURRS.
5. TO BE A WELDED CONSTRUCTION.

DO NOT SCALE THE DRAWING
ASK IF IN DOUBT
UNLESS OTHERWISE SHOWN
ALL DIMENSIONS ARE IN MILLIMETERS
REMOVE SHARP EDGES & BURRS
CHAMFER 1 M.M. X 45°
MACHINING FINISH IN MICRONS :–
▽ 8 – 25 ▽▽ 1.6 – 8
▽▽▽ 0.025 – 1.6 ▽▽▽▽ < 0.025

DEVIATION FOR NON TOLERANCED DIMENSIONS (IS –2102)

DIAMETERS & LENGTHS	
UPTO & INCL. 6	+0.1
6 – 30	+0.2
30 – 120	+0.3
120 – 315	+0.5
315 – 1000	+0.8
1000 – 2000	+1.2
2000 – 4000	+2.0
4000 & ABOVE	+3.0

LENGTH IN M.M. OF SHORTER SIDE OF ANGLE UPTO & INCL.	
1– 6	± 1°–00'
6– 30	± 0°–30'
30–120	± 0°–20'
120–400	± 0°–10'

SPP

MATERIAL:	REF BOM
FINISH: PAINTING	
DRAWN	R.S
DRG.CHKD	C.P.K
APPROVED	M.P

TITLE
WORKING PLATFORM
TRUCK (RH)

SATISH DHAWAN SPACE CENTRE
SOLID PROPELLANT PLANT
I.S.R.O SRIHARIKOTA

PROJECTION

SCALE	DRG. NO.	DATE	SHEET
1 : 22	626-102-02-003-A2-R0	05.08.11	OF

REF. DRG. NO.
COM. FILE NO.

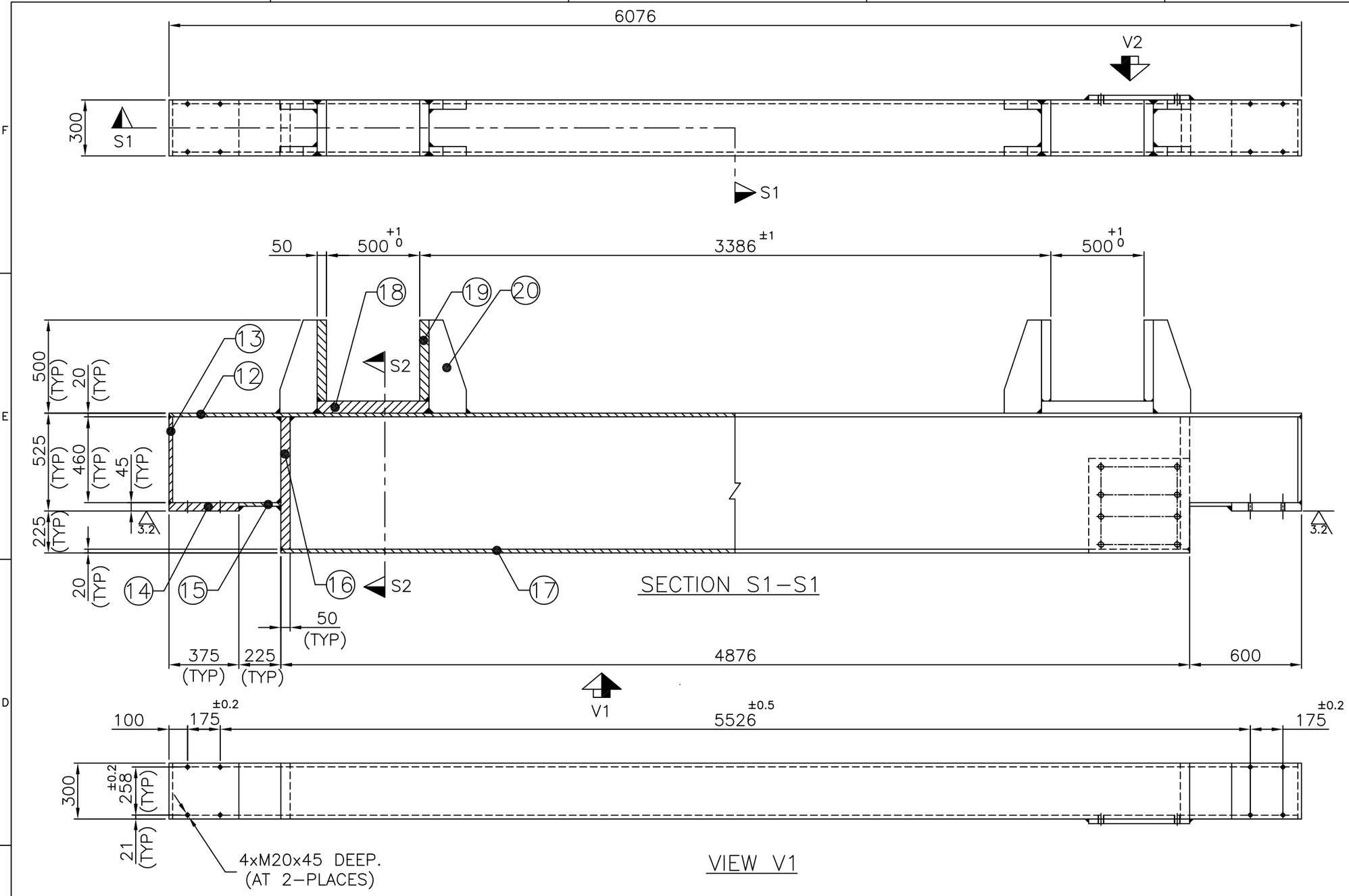

SECTION S1-S1

VIEW V1

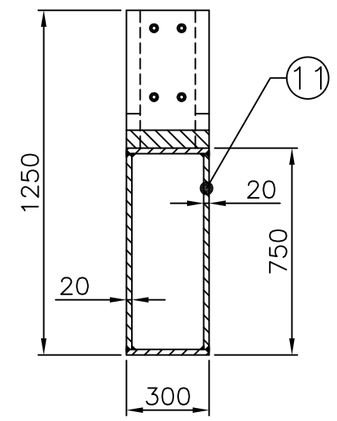

SECTION S2-S2

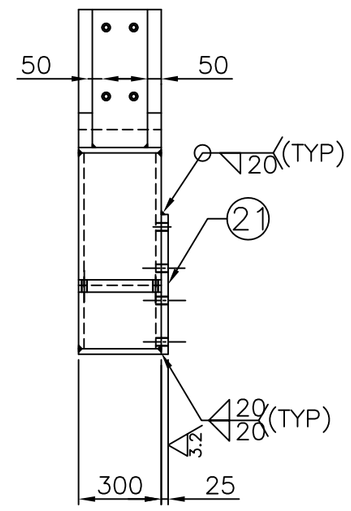

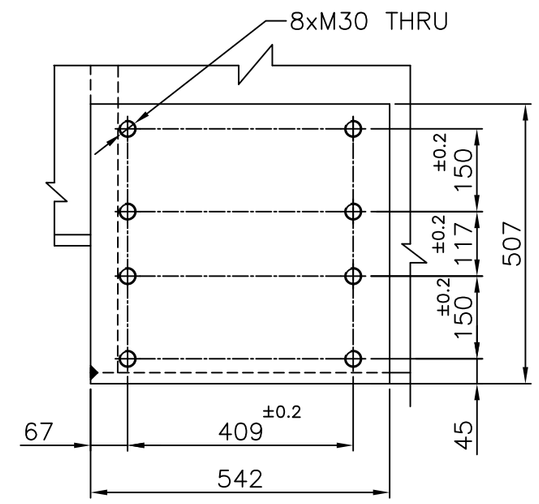

VIEW V1
SCALE 1:10

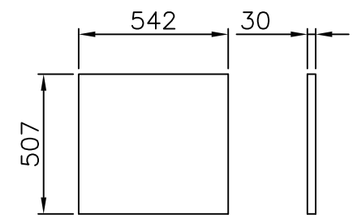

DETAIL OF ITEM NO:21

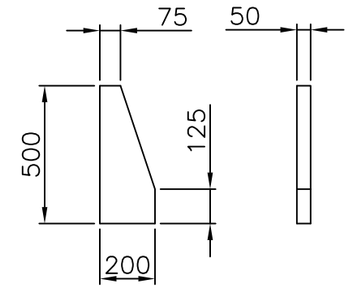

DETAIL OF ITEM NO:20

ITEM NO.	DESCRIPTION	MATERIAL	SPECIFICATION	QTY.
11	PLATE	IS:2062 Gr-B	6045x715x20 THK.	02
12	PLATE	IS:2062 Gr-B	6086x305x20 THK.	01
13	PLATE	IS:2062 Gr-B	465x305x20 THK.	02
14	PLATE	IS:2062 Gr-B	380x305x50 THK.	02
15	PLATE	IS:2062 Gr-B	305x230x20 THK.	02
16	PLATE	IS:2062 Gr-B	715x265x50 THK.	02
17	PLATE	IS:2062 Gr-B	4886x305x20 THK.	01
18	PLATE	IS:2062 Gr-B	605x305x65 THK.	02
19	PLATE	IS:2062 Gr-B	440x305x50 THK.	04
20	PLATE	IS:2062 Gr-B	500x200x50 THK.	08
21	PLATE	IS:2062 Gr-B	547x512x30 THK.	01

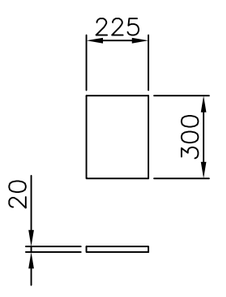

DETAIL OF ITEM NO:15

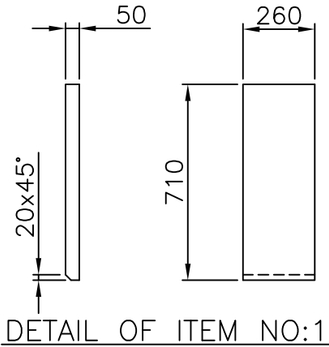

DETAIL OF ITEM NO:16

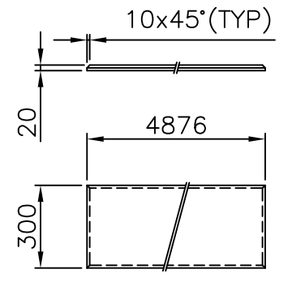

DETAIL OF ITEM NO:17

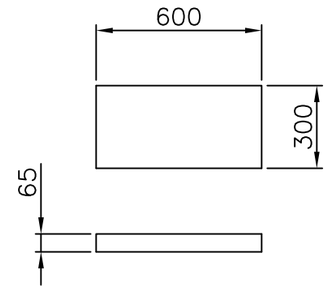

DETAIL OF ITEM NO:18

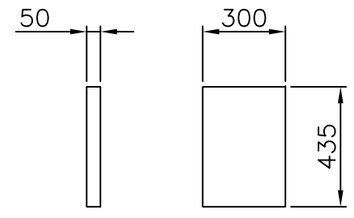

DETAIL OF ITEM NO:19

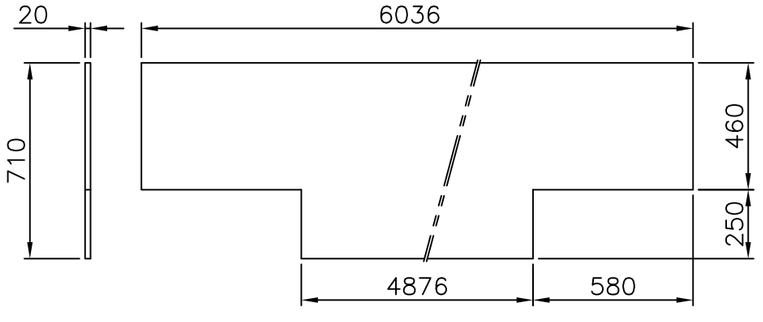

DETAIL OF ITEM NO:11

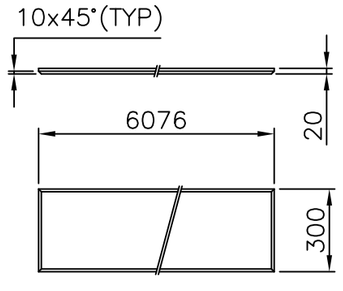

DETAIL OF ITEM NO:12

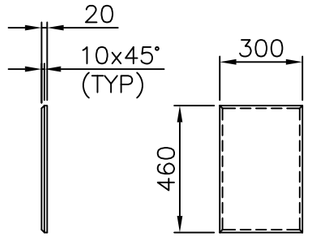

DETAIL OF ITEM NO:13

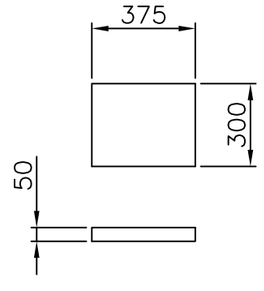

DETAIL OF ITEM NO:14

NOTES:

1. WEIGHT : 3266Kgs.
2. QTY/ASSY. : 01No.
3. ALL STRUCTURAL WELDS SHALL BE CONTINUOUS AND FULL PENETRATION TYPE. AND WELD SHALL BE OF 20MM(MIN).
4. REMOVE ALL SHARP CORNERS AND BURRS.
5. TO BE A WELDED CONSTRUCTION.
6. COVER ALL TAPPED HOLES DURING PAINTING

DO NOT SCALE THE DRAWING
ASK IF IN DOUBT
UNLESS OTHERWISE SHOWN
ALL DIMENSIONS ARE IN MILLIMETERS
REMOVE SHARP EDGES & BURRS
CHAMFER 1 M.M. X 45°
MACHINING FINISH IN MICRONS :-
▽ 8 - 25 ▽▽ 1.6 - 8
▽▽▽ 0.025 - 1.6 ▽▽▽▽ < 0.025

DEVIATION FOR NON TOLERANCED DIMENSIONS (IS -2102)

DIAMETERS & LENGTHS	
UPTO & INCL. 6	+0.1
6 - 30	+0.2
30 - 120	+0.3
120 - 315	+0.5
315 - 1000	+0.8
1000 - 2000	+1.2
2000 - 4000	+2.0
4000 & ABOVE	+3.0

LENGTH IN M.M. OF SHORTER SIDE OF ANGLE UPTO & INCL.	
1- 6	± 1°-00'
6- 30	± 0°-30'
30-120	± 0°-20'
120-400	± 0°-10'

SPP

TITLE: WORKING PLATFORM TRUCK (LH)

SATISH DHAWAN SPACE CENTRE
SOLID PROPELLANT PLANT
I.S.R.O SRIHARIKOTA

MATERIAL: REF. BOM			
FINISH: PAINTING			
DRAWN	R.S		
DRG.CHKD	C.P.K		
APPROVED	M.P		
SCALE 1 : 22	DRG. NO. 626-102-02-004-A2-R0	DATE 05.08.11	SHEET OF

PROJECTION

PART NO.	DESCRIPTION	MATERIAL	SPECIFICATION	QTY.
1	PLATE	IS:2062 Gr. B	190x130x16 THK.	01
2	PLATE	IS:2062 Gr. B	235x130x12 THK.	01
3	PLATE	IS:2062 Gr. B	130x75x16 THK.	01
4	PLATE	IS:2062 Gr. B	110x60x12 THK.	03

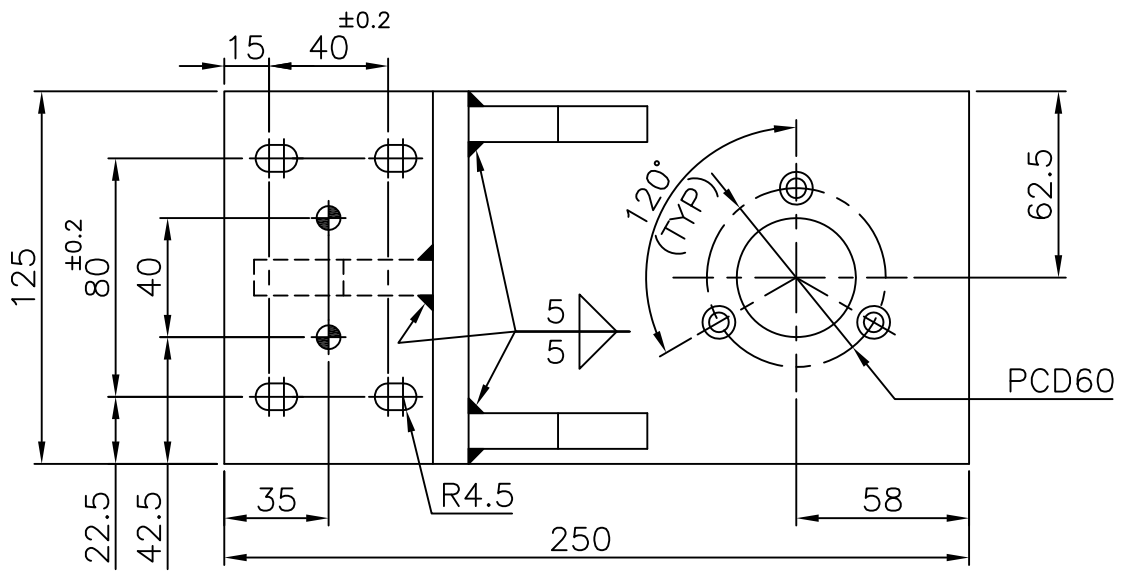

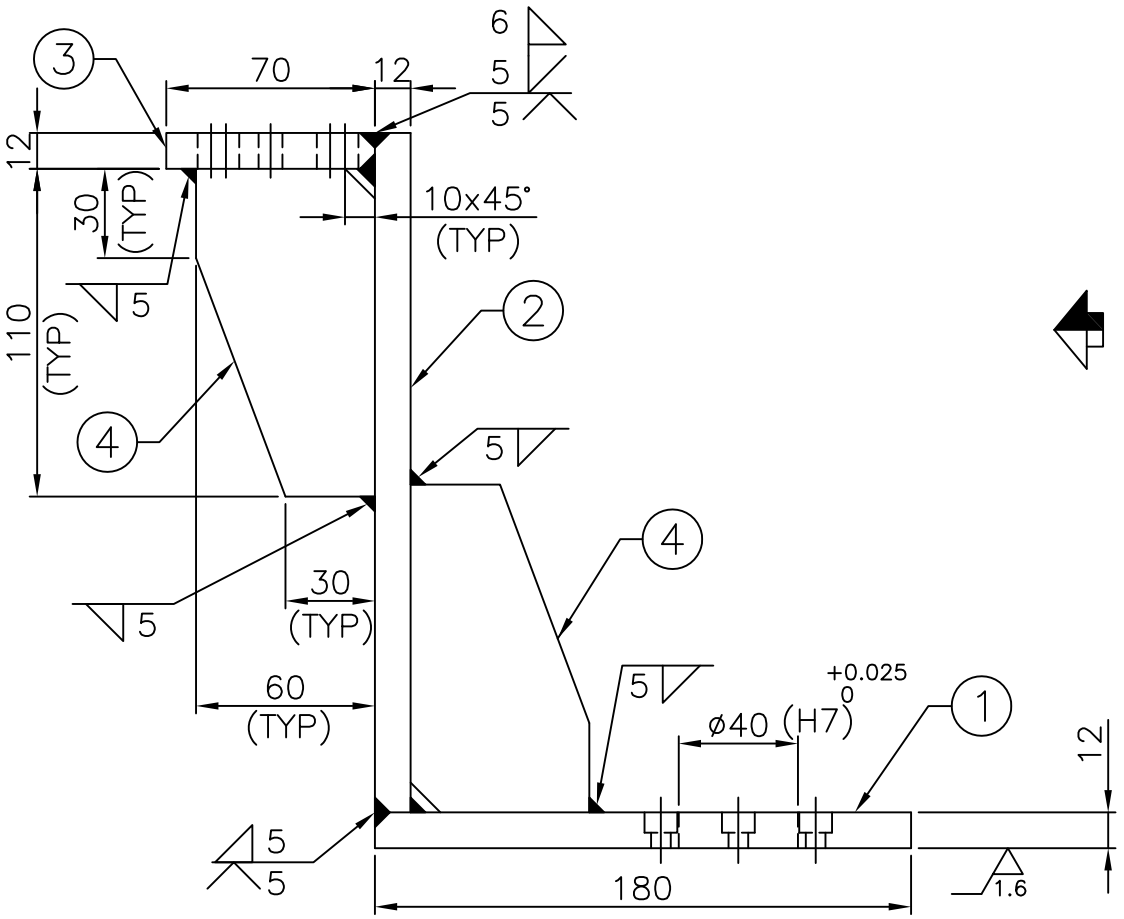

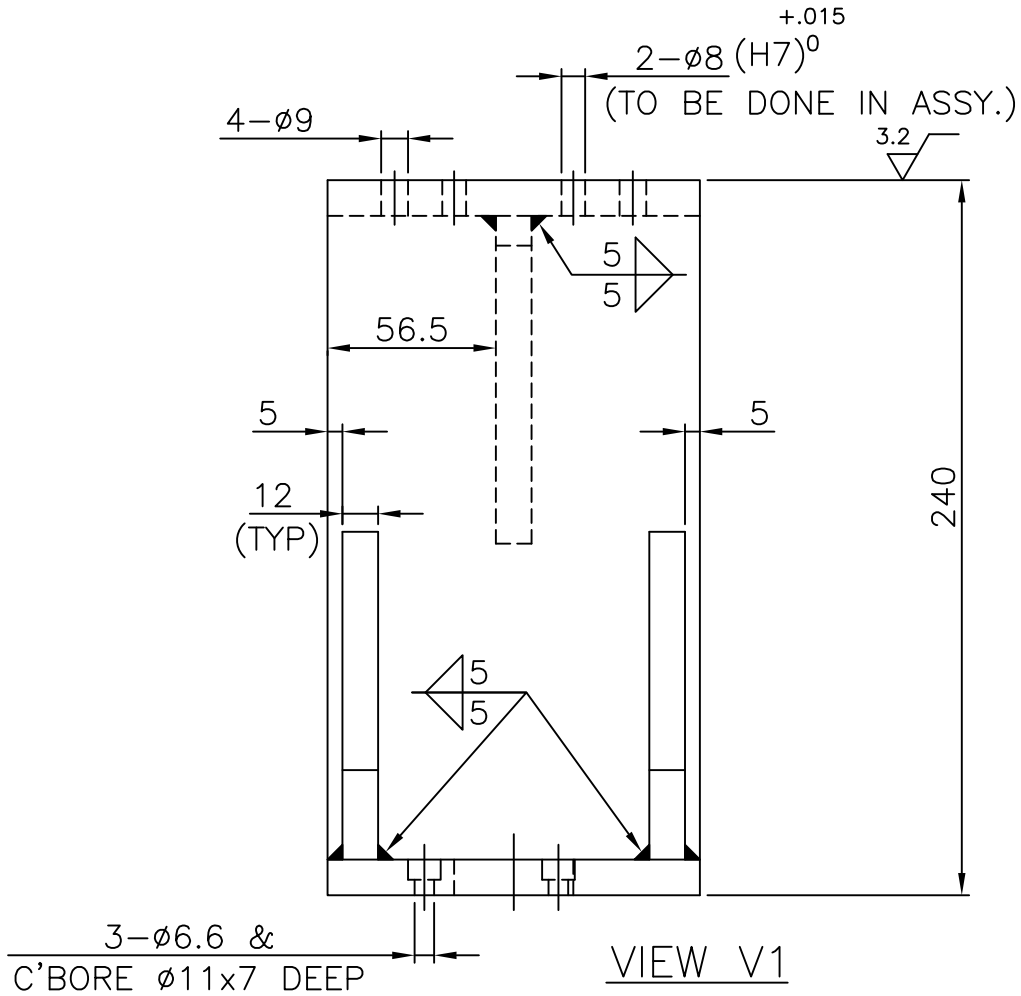

V1

NOTES:

1. MATERIAL : REFER BOM
2. REMOVE ALL SHARP CORNERS AND BURRS.
3. TO BE A WELDED CONSTRUCTION.
4. REFER. TENDER DOCUMENT FOR ALL WELDING SPECIFICATION.
5. ALL STRUCTURAL WELD SHALL BE CONTINUOUS AND FULL PENETRATION TYPE. THE WELDS SHALL BE DULY INSPECTED BY DP TESTING.
6. BORES AND MACHINED SURFACE SHALL BE MASKED DURING THE PAINTING PROCESS.

DO NOT SCALE THE DRAWING
ASK IF IN DOUBT
UNLESS OTHERWISE SHOWN
ALL DIMENSIONS ARE IN MILLIMETERS
REMOVE SHARP EDGES & BURRS
CHAMFER 1 M.M. X 45°
MACHINING FINISH IN MICRONS :−
▽ 8 − 25 ▽▽ 1.6 − 8
▽▽▽ 0.025 − 1.6 ▽▽▽▽ < 0.025

DEVIATION FOR NON TOLERANCED DIMENSIONS (IS −2102)

DIAMETERS & LENGTHS	
UPTO & INCL. 6	+0.1
6 − 30	+0.2
30 − 120	+0.3
120 − 315	+0.5
315 − 1000	+0.8
1000 − 2000	+1.2
2000 − 4000	+2.0
4000 & ABOVE	+3.0

LENGTH IN M.M. OF SHORTER SIDE OF ANGLE UPTO & INCL.	
1− 6	± 1°−0'
6− 30	± 0°−30'
30−120	± 0°−20'
120−400	± 0°−10'

SPP

MATERIAL:	REF BOM
FINISH:	PAINTING
DRAWN	R.S
DRG.CHKD	C.P.K.
APPROVED	M.P.

TITLE: ENCODER MOUNTING BRACKET (WHEEL MODULE)

SATISH DHAWAN SPACE CENTRE
SOLID PROPELLANT PLANT
I.S.R.O SRIHARIKOTA

PROJECTION

SCALE	DRG. NO.	DATE	SHEET
1 : 2.5	626-101-06-010-A3-R0	05.08.11	OF

REF. DRG. NO.
COM. FILE NO.

REF. DRG. NO.
COM. FILE NO.

3.2 (1.6)

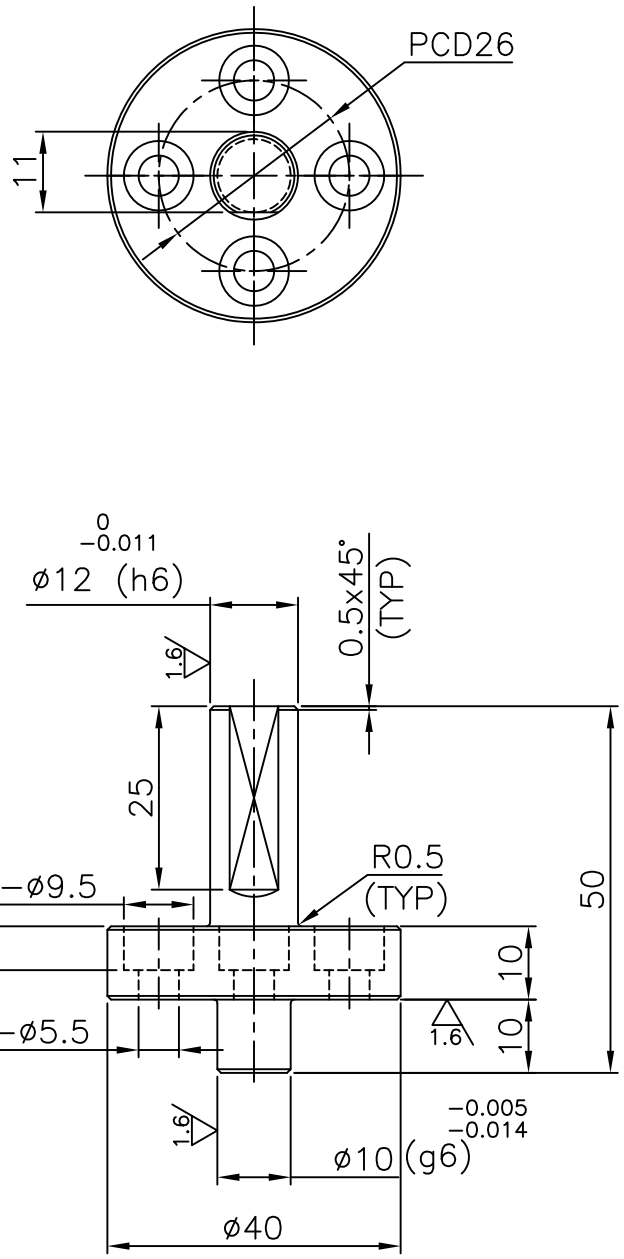

NOTES:

1. REMOVE ALL SHARP CORNERS AND BURRS.

DO NOT SCALE THE DRAWING
ASK IF IN DOUBT
UNLESS OTHERWISE SHOWN
ALL DIMENSIONS ARE IN MILLIMETERS
REMOVE SHARP EDGES & BURRS
CHAMFER 1 M.M. X 45°
MACHINING FINISH IN MICRONS :−
▽ 8 − 25 ▽▽ 1.6 − 8
▽▽▽ 0.025 − 1.6 ▽▽▽▽ < 0.025

DEVIATION FOR NON TOLERANCED DIMENSIONS (IS −2102)

DIAMETERS & LENGTHS	
UPTO & INCL. 6	+0.1
6 − 30	+0.2
30 − 120	+0.3
120 − 315	+0.5
315 − 1000	+0.8
1000 − 2000	+1.2
2000 − 4000	+2.0
4000 & ABOVE	+3.0

LENGTH IN M.M. OF SHORTER SIDE OF ANGLE UPTO & INCL.	
1− 6	± 1°−0′
6− 30	± 0°−30′
30−120	± 0°−20′
120−400	± 0°−10′

SPP

MATERIAL: En 8 Ø 45 x 55
FINISH: BLACKENING
DRAWN: R.S
DRG.CHKD: C.P.K.
APPROVED: M.P.

TITLE: ADAPTOR FOR ENCODER

SATISH DHAWAN SPACE CENTRE
SOLID PROPELLANT PLANT
I.S.R.O SRIHARIKOTA

PROJECTION

SCALE	DRG. NO.	DATE	SHEET
1 : 1	626-101-06-012-A4-R0	05.08.11	OF

REF. DRG. NO.
COM. FILE NO.

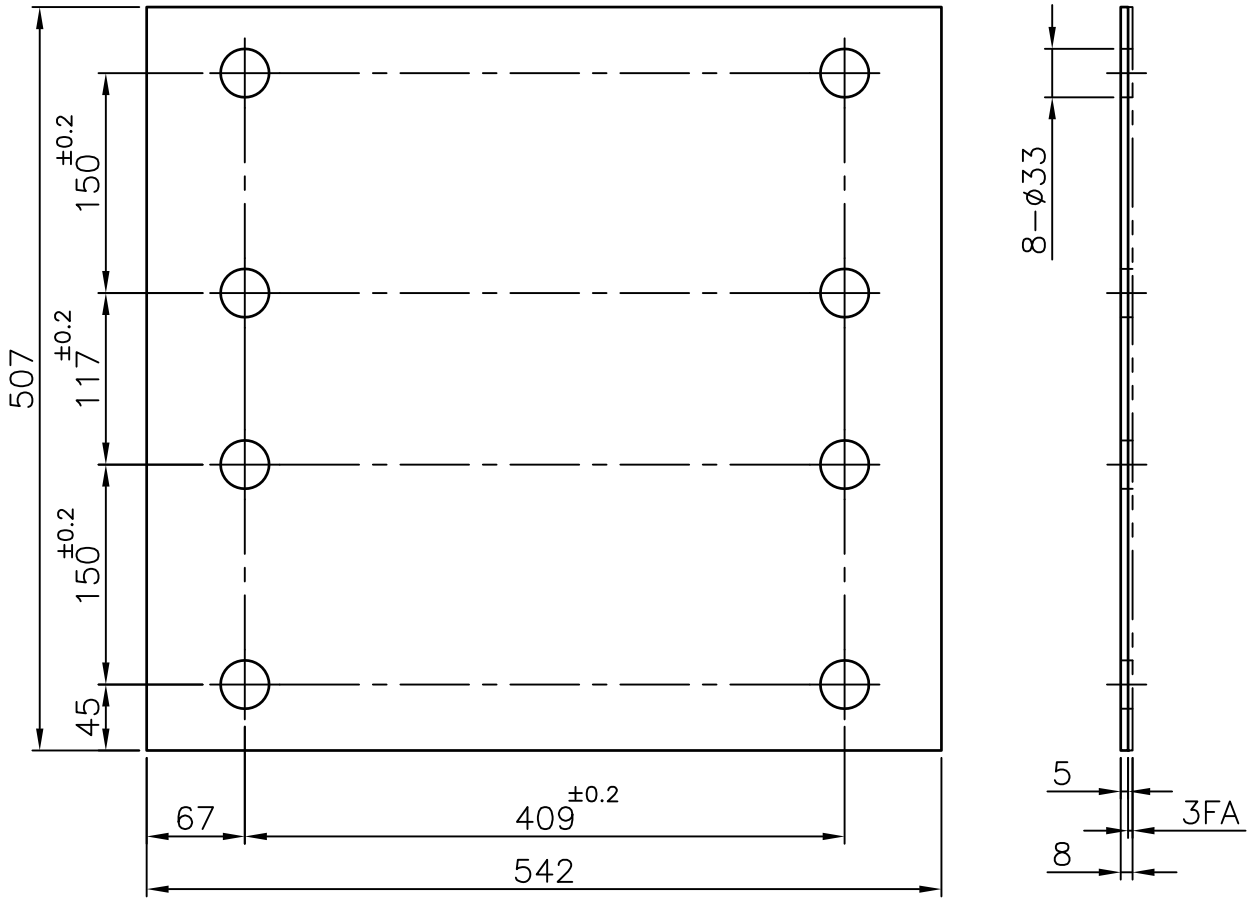

NOTES:

1. REMOVE ALL SHARP CORNERS AND BURRS.

DO NOT SCALE THE DRAWING
ASK IF IN DOUBT
UNLESS OTHERWISE SHOWN
ALL DIMENSIONS ARE IN MILLIMETERS
REMOVE SHARP EDGES & BURRS
CHAMFER 1 M.M. X 45°
MACHINING FINISH IN MICRONS :-
▽ 8 − 25 ▽▽ 1.6 − 8
▽▽▽ 0.025 − 1.6 ▽▽▽▽ < 0.025

DEVIATION FOR NON TOLERANCED DIMENSIONS (IS −2102)

DIAMETERS & LENGTHS		LENGTH IN M.M. OF SHORTER SIDE OF ANGLE UPTO & INCL.
UPTO & INCL. 6	+0.1	
6 − 30	+0.2	
30 − 120	+0.3	
120 − 315	+0.5	1− 6 ± 1°−0′
315 − 1000	+0.8	6− 30 ± 0°−30′
1000 − 2000	+1.2	30−120 ± 0°−20′
2000 − 4000	+2.0	120−400 ± 0°−10′
4000 & ABOVE	+3.0	

SPP

MATERIAL:	IS:2062 Gr-B 550 x 515 x 10
FINISH:	PAINTING
DRAWN	R.S
DRG.CHKD	C.P.K.
APPROVED	M.P.

TITLE: SHIM

SATISH DHAWAN SPACE CENTRE
SOLID PROPELLANT PLANT
I.S.R.O SRIHARIKOTA

SCALE	DRG. NO.	DATE	SHEET
1 : 5	626-102-03-004-A4-R0	05.08.11	OF

PROJECTION

REF. DRG. NO.
COM. FILE NO.

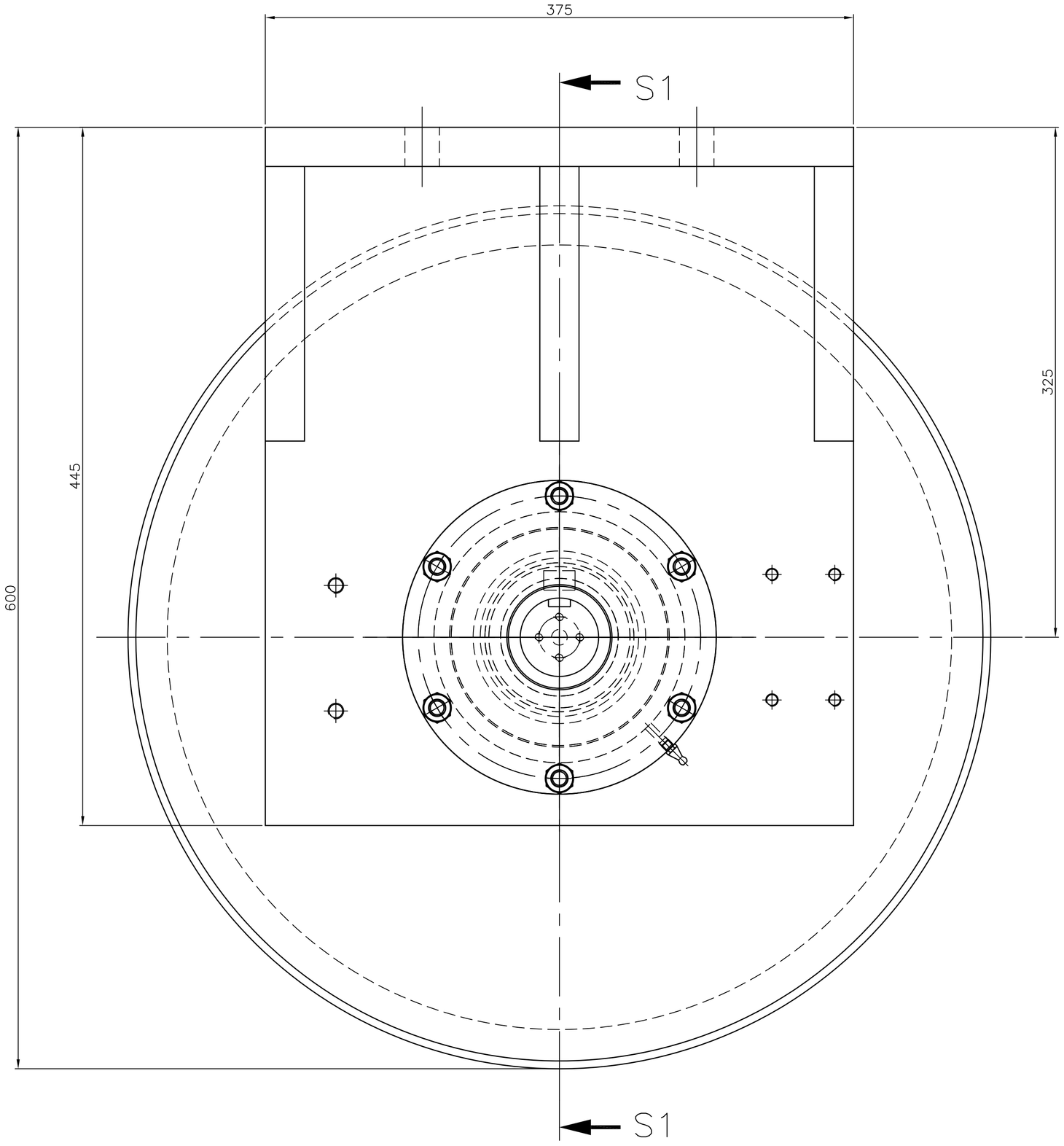

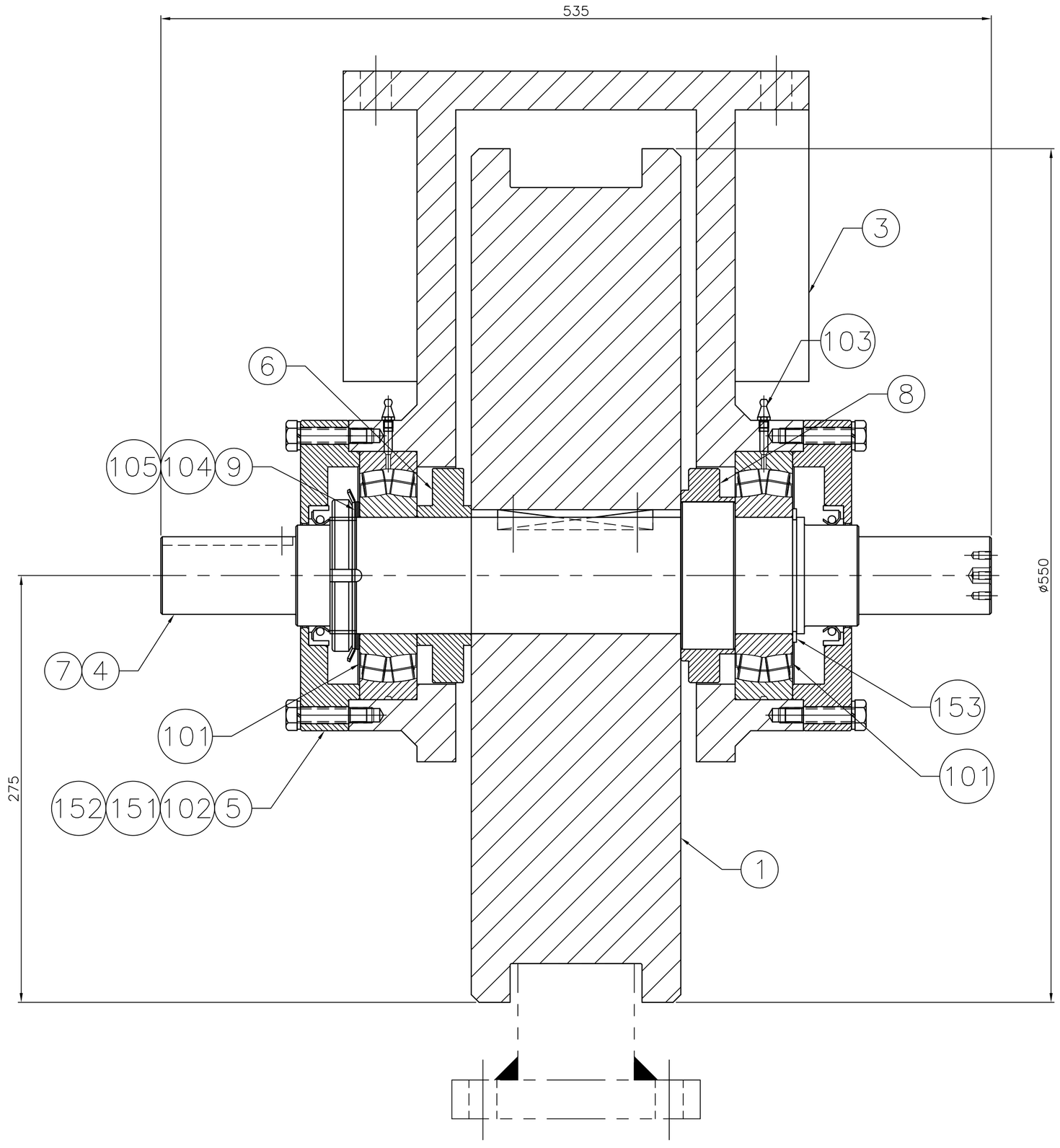

SECTION S1–S1

PART NO.	DESCRIPTION	MATERIAL	SPECIFICATION	QTY.
153	CIRCLIP	IS:3075–1965	A–75	01
152	SPRING WASHER	IS:3063–1972	M10	12
151	HEX. HEAD BOLT	IS:1363–1967	M10x45	12
105	LOCK NUT	SKF	KM15	01
104	LOCK WASHER	SKF	MB15	01
103	GREASE NIPPLE	STD	GNM6	02
102	OIL SEAL	BUSAK SHAMBAN	TRA500650	02
101	SPH. ROLLER BRG.	SKF	21315E	02
9	SPACER–C	REFER DWG.	626–101–01–010–A4–R0	01
8	SPACER–B	REFER DWG.	626–101–01–009–A4–R0	01
7	KEY	REFER DWG.	626–101–01–008–A4–R0	01
6	SPACER–A	REFER DWG.	626–101–01–007–A4–R0	01
5	END CAP	REFER DWG.	626–101–01–006–A3–R0	02
4	SHAFT	REFER DWG.	626–101–01–005–A3–R0	01
3	MOUNTING BRACKET(MACHINED)	REFER DWG.	626–101–01–004–A3–R0	01
2	MOUNTING BRACKET(Fabrication)	REFER DWG.	626–101–01–003–A3–R0	01
1	WHEEL	REFER DWG.	626–101–01–002–A3–R0	01

DO NOT SCALE THE DRAWING
ASK IF IN DOUBT
UNLESS OTHERWISE SHOWN
ALL DIMENSIONS ARE IN MILLIMETERS
REMOVE SHARP EDGES & BURRS
CHAMFER 1 M.M. X 45°
MACHINING FINISH IN MICRONS :–
▽ 8 – 25 ▽▽ 1.6 – 8
▽▽▽ 0.025 – 1.6 ▽▽▽▽ < 0.025

DEVIATION FOR NON TOLERANCED DIMENSIONS (IS –2102)

DIAMETERS & LENGTHS	
UPTO & INCL. 6	+0.1
6 – 30	+0.2
30 – 120	+0.3
120 – 315	+0.5
315 – 1000	+0.8
1000 – 2000	+1.2
2000 – 4000	+2.0
4000 & ABOVE	+3.0

LENGTH IN M.M. OF SHORTER SIDE OF ANGLE UPTO & INCL.	
1– 6	± 1°–0′
6– 30	± 0°–30′
30–120	± 0°–20′
120–400	± 0°–10′

SPP

TITLE: WHEEL MODULE ASSEMBLY

SATISH DHAWAN SPACE CENTRE
SOLID PROPELLANT PLANT
I.S.R.O SRIHARIKOTA

MATERIAL:			
FINISH:			
DRAWN	R.S		
DRG.CHKD	C.P.K.		
APPROVED	M.P.		
SCALE 1:2	DRG. NO. 626-101-01-001-A1-R0	DATE 05.08.11	SHEET OF

PROJECTION

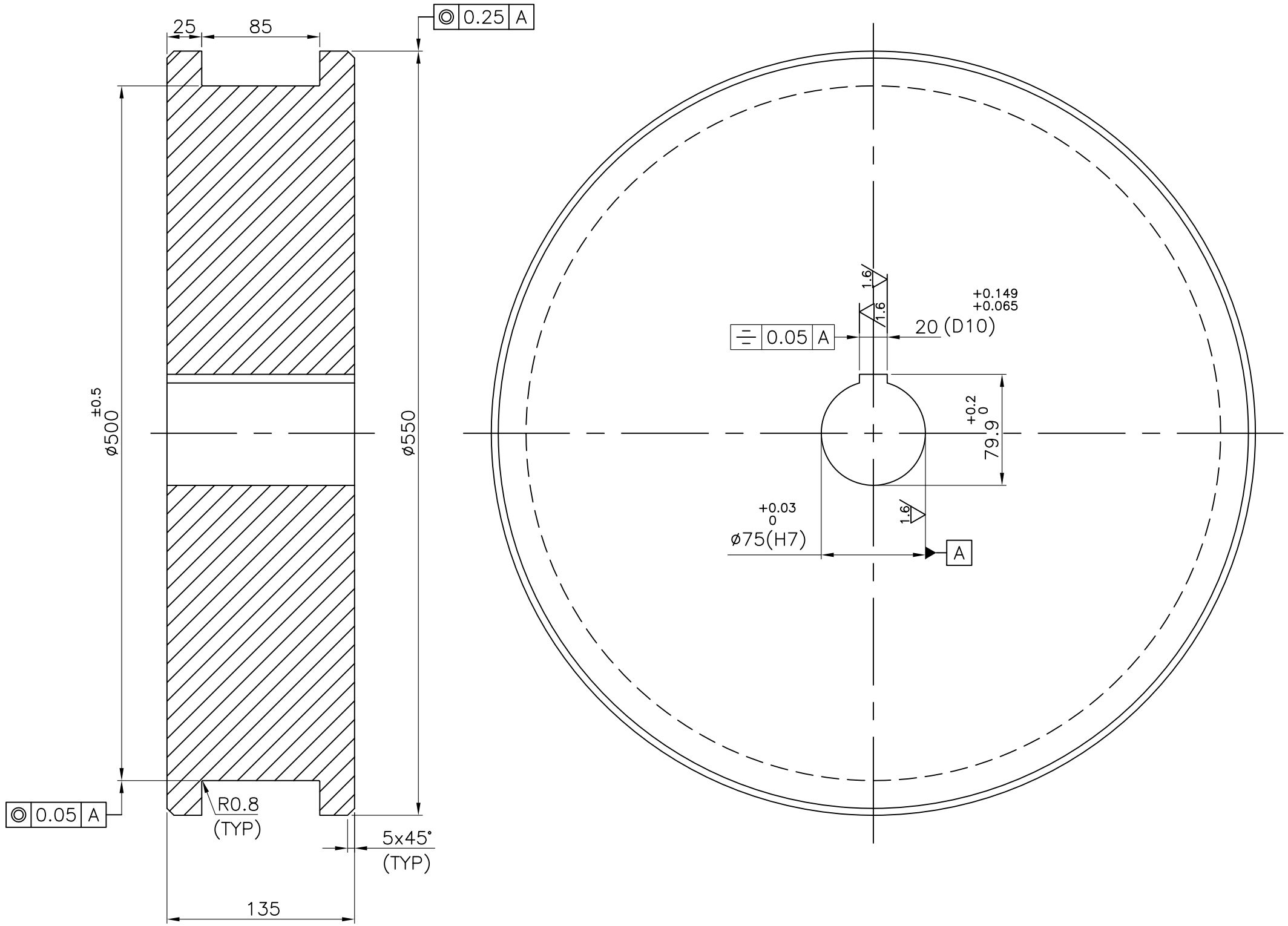

NOTES:

1. MATERIAL : FORGED STEEL C45 (En 8) AS PER IS:2004–1991 CLASS 4 SPECIFICATION FOR CARBON STEEL FORGING.
2. QTY/ASSEMBLY : 4 No.
3. WEIGHT : 240 Kg.
4. WHEEL SHALL BE FLAME HARDENED/INDUCTION HARDENED TO 32HRC(300 BHN) UP TO DEPTH OF 2–3MM.

DO NOT SCALE THE DRAWING
ASK IF IN DOUBT
UNLESS OTHERWISE SHOWN
ALL DIMENSIONS ARE IN MILLIMETERS
REMOVE SHARP EDGES & BURRS
CHAMFER 1 M.M. X 45°
MACHINING FINISH IN MICRONS :–
▽ 8 – 25 ▽▽ 1.6 – 8
▽▽▽ 0.025 – 1.6 ▽▽▽▽ < 0.025

DEVIATION FOR NON TOLERANCED DIMENSIONS (IS –2102)

DIAMETERS & LENGTHS	
UPTO & INCL. 6	+0.1
6 – 30	+0.2
30 – 120	+0.3
120 – 315	+0.5
315 – 1000	+0.8
1000 – 2000	+1.2
2000 – 4000	+2.0
4000 & ABOVE	+3.0

LENGTH IN M.M. OF SHORTER SIDE OF ANGLE UPTO & INCL.	
1– 6	± 1°–0'
6– 30	± 0°–30'
30–120	± 0°–20'
120–400	± 0°–10'

SPP

TITLE: WHEEL

MATERIAL:	REF NOTE NO.1 Ø555x140
FINISH:	PAINTING
DRAWN	R.S
DRG.CHKD	C.P.K.
APPROVED	M.P.

SATISH DHAWAN SPACE CENTRE
SOLID PROPELLANT PLANT
I.S.R.O SRIHARIKOTA

PROJECTION

SCALE	DRG. NO.	DATE	SHEET
1 : 3	626-101-01-002-A3-R0	05.08.11	OF

REF. DRG. NO.
COM. FILE NO.

PART NO.	DESCRIPTION	MATERIAL	SPECIFICATION	QTY.
1	BOSS	IS:2062 Gr–B	ø205 x 75	02
2	RIB	IS:2062 Gr–B	175 x 48 x 25	06
3	PLATE	IS:2062 Gr–B	425 x 380 x 25	02
4	PLATE	IS:2062 Gr–B	305 x 380 x 30	01

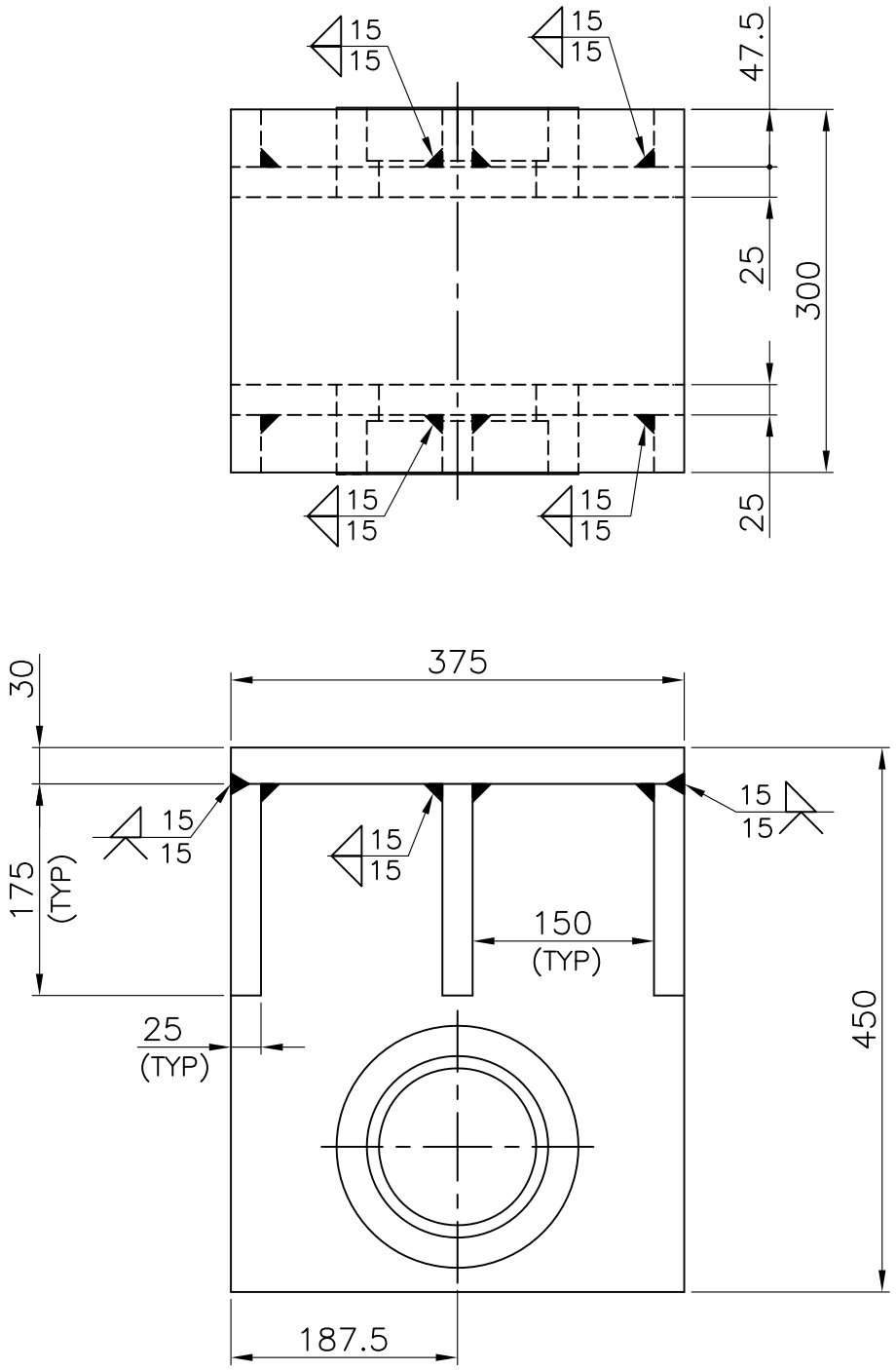

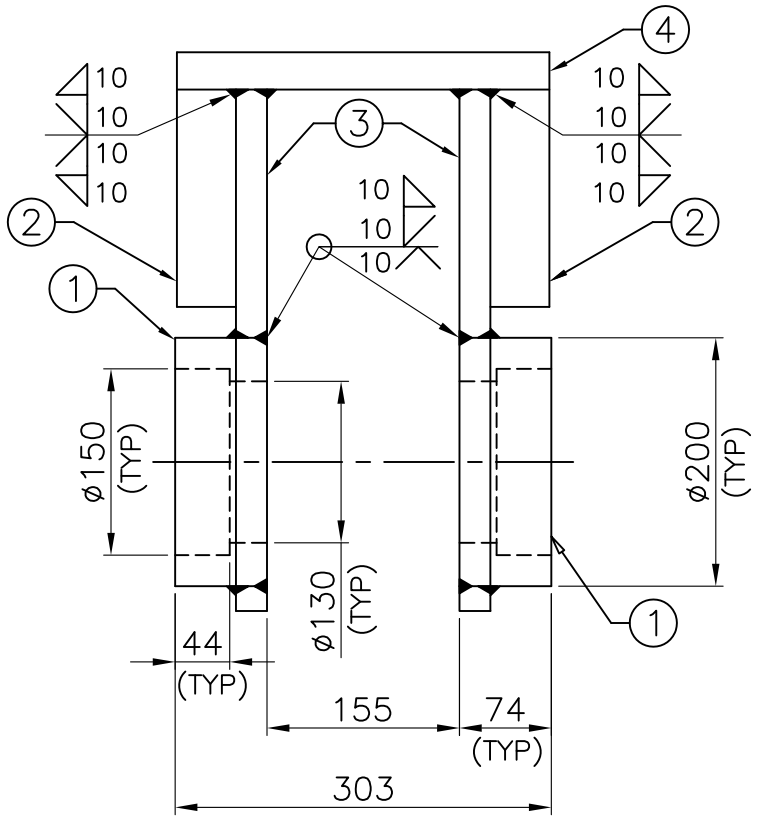

VIEW V1

NOTES:

1. MATERIAL : REFER BOM
2. TO BE A WELDED CONSTRUCTION.
3. REMOVE ALL SHARP CORNERS AND BURRS.
4. REFER. TENDER DOCUMENT FOR ALL WELDING SPECIFICATION. ALL WELDING SHALL BE STRICTLY AS PER THE ABOVE MENTIONED SPECIFICTION DOCUMENT.
5. ALL STRUCTURAL WELD SHALL BE CONTINUOUS AND FULL PENETRATION TYPE. THE WELDS SHALL BE DULY INSPECTED BY DP TESTING.

DO NOT SCALE THE DRAWING
ASK IF IN DOUBT
UNLESS OTHERWISE SHOWN
ALL DIMENSIONS ARE IN MILLIMETERS
REMOVE SHARP EDGES & BURRS
CHAMFER 1 M.M. X 45°
MACHINING FINISH IN MICRONS :–
▽ 8 – 25 ▽▽ 1.6 – 8
▽▽▽ 0.025 – 1.6 ▽▽▽▽ < 0.025

DEVIATION FOR NON TOLERANCED DIMENSIONS (IS –2102)

DIAMETERS & LENGTHS	
UPTO & INCL. 6	+0.1
6 – 30	+0.2
30 – 120	+0.3
120 – 315	+0.5
315 – 1000	+0.8
1000 – 2000	+1.2
2000 – 4000	+2.0
4000 & ABOVE	+3.0

LENGTH IN M.M. OF SHORTER SIDE OF ANGLE UPTO & INCL.	
1– 6	± 1°–00'
6– 30	± 0°–30'
30–120	± 0°–20'
120–400	± 0°–10'

SPP

MATERIAL:	REF BOM
FINISH:	PAINTING
DRAWN	R.S
DRG.CHKD	C.P.K.
APPROVED	M.P.

TITLE
MOUNTING BRACKET (FABRICATION)

SATISH DHAWAN SPACE CENTRE
SOLID PROPELLANT PLANT
I.S.R.O SRIHARIKOTA

PROJECTION

SCALE	DRG. NO.	DATE	SHEET	OF
1 : 6	626-101-01-003-A3-R0	05.08.11	1	2

REF. DRG. NO.
COM. FILE NO.

REF. DRG. NO.
COM. FILE NO.

3.2 (1.6)

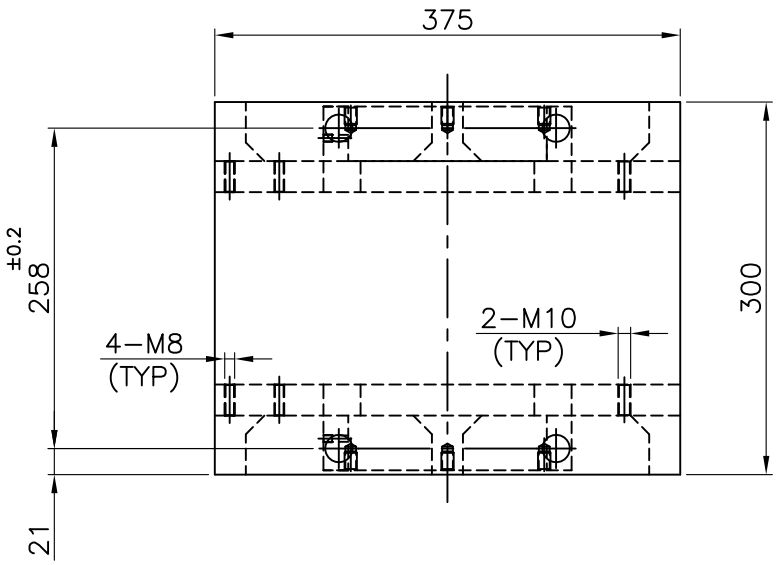

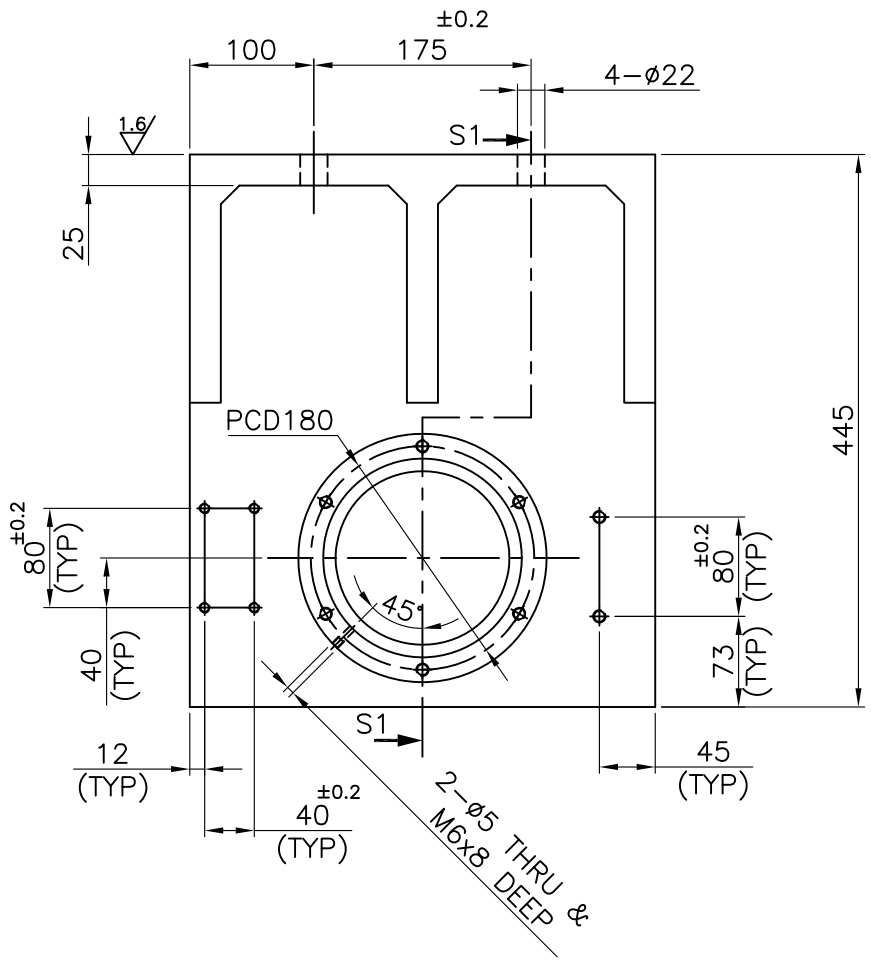

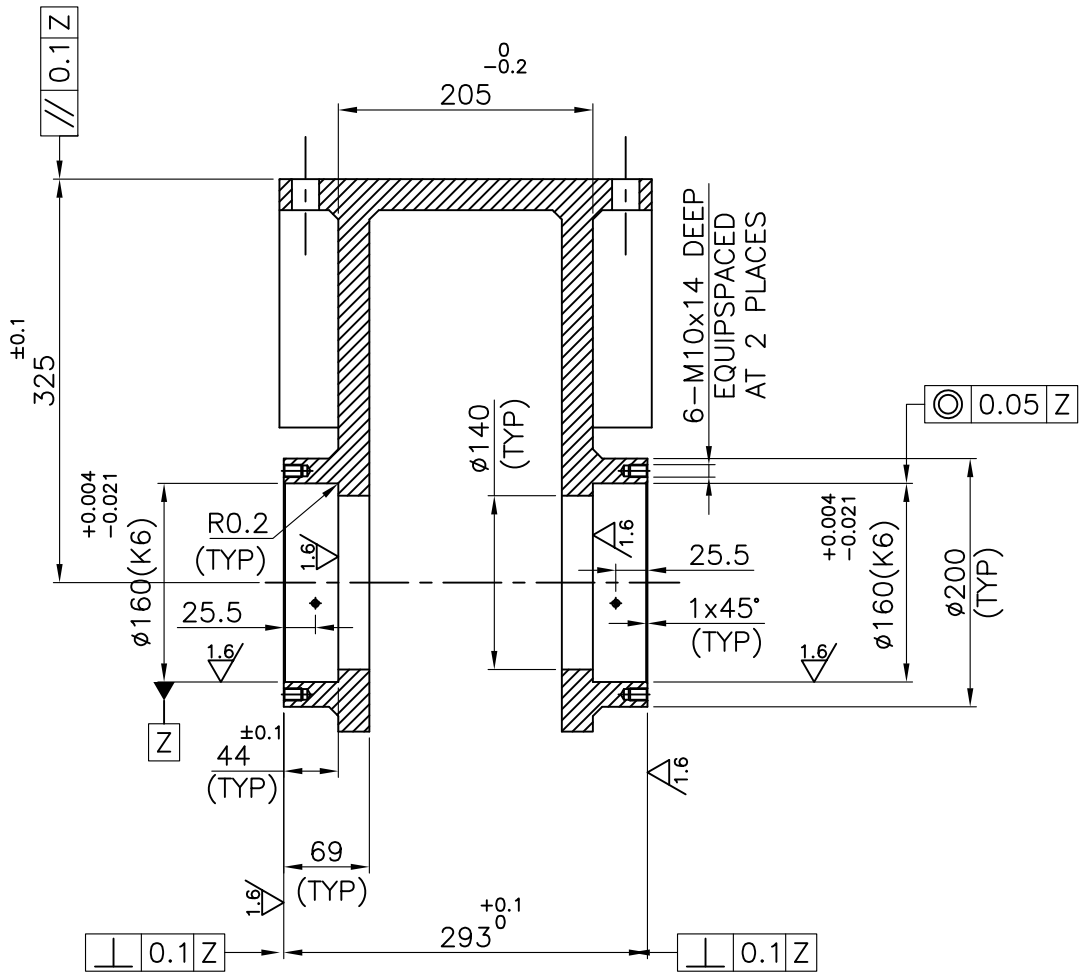

SECTION S1−S1

NOTES:

1. REMOVE ALL SHARP CORNERS AND BURRS.
2. BORES AND MACHINED SURFACE SHALL BE MASKED DURING THE PAINTING PROCESS.
3. BORE DIA 160 AND DIA 140 SHALL BE DONE IN A SINGLE SET UP.

DO NOT SCALE THE DRAWING
ASK IF IN DOUBT
UNLESS OTHERWISE SHOWN
ALL DIMENSIONS ARE IN MILLIMETERS
REMOVE SHARP EDGES & BURRS
CHAMFER 1 M.M. X 45°
MACHINING FINISH IN MICRONS :−
▽ 8 − 25 ▽▽ 1.6 − 8
▽▽▽ 0.025 − 1.6 ▽▽▽▽ < 0.025

DEVIATION FOR NON TOLERANCED DIMENSIONS (IS −2102)

DIAMETERS & LENGTHS		LENGTH IN M.M. OF SHORTER SIDE OF ANGLE UPTO & INCL.	
UPTO & INCL. 6	+0.1	1− 6	± 1°−0'
6 − 30	+0.2	6− 30	± 0°−30'
30 − 120	+0.3	30−120	± 0°−20'
120 − 315	+0.5	120−400	± 0°−10'
315 − 1000	+0.8		
1000 − 2000	+1.2		
2000 − 4000	+2.0		
4000 & ABOVE	+3.0		

SPP

MATERIAL:	REF B.O.M.
FINISH:	PAINTING
DRAWN	R.S
DRG.CHKD	C.P.K.
APPROVED	M.P.

TITLE
MOUNTING BRACKET (MACHINED)

SATISH DHAWAN SPACE CENTRE
SOLID PROPELLANT PLANT
I.S.R.O SRIHARIKOTA

PROJECTION

SCALE	DRG. NO.	DATE	SHEET / OF
1 : 6	626-101-01-004-A3-R0	05.08.11	SHEET 2 OF 2

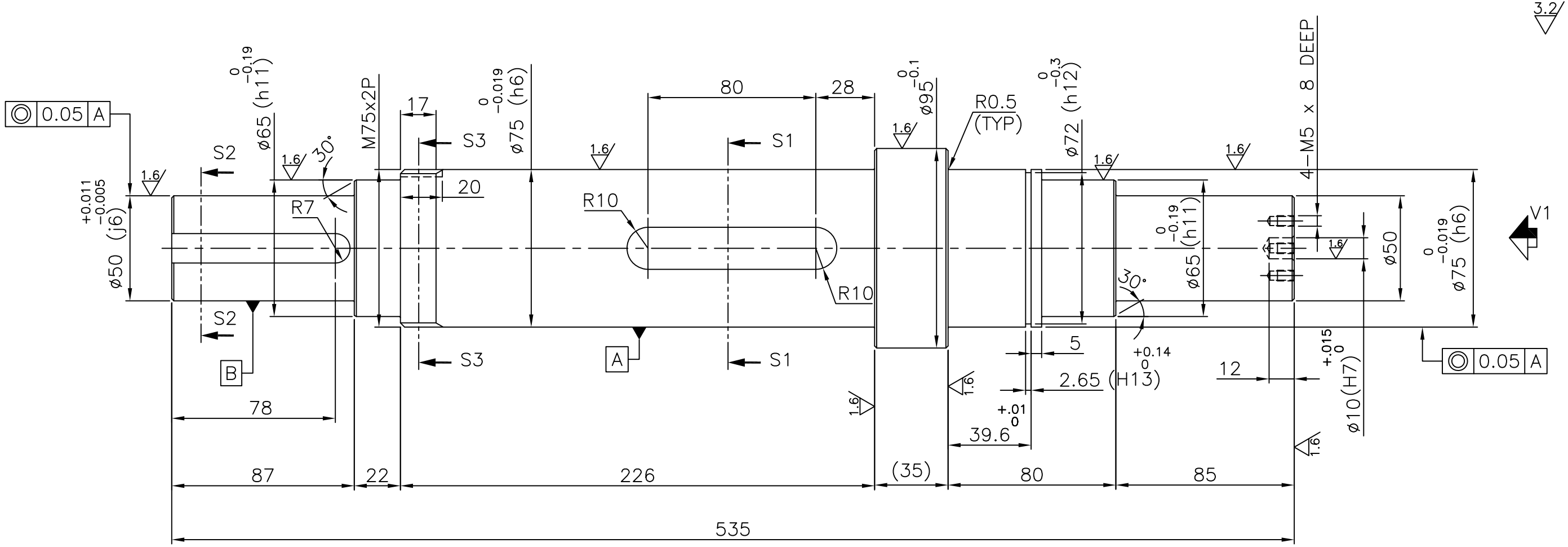

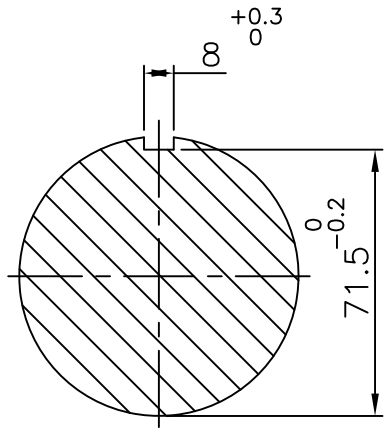

SECTION S3–S3

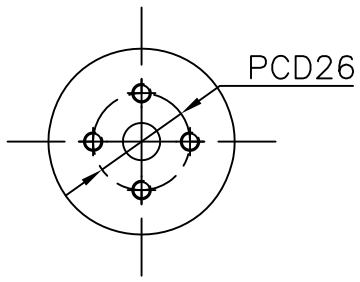

VIEW V1

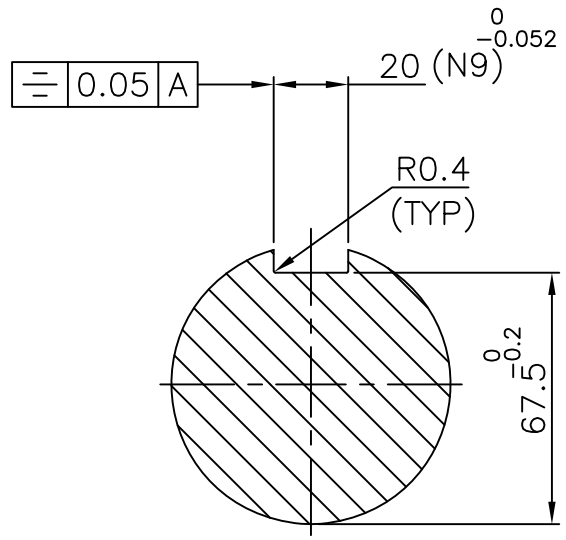

SECTION S1–S1

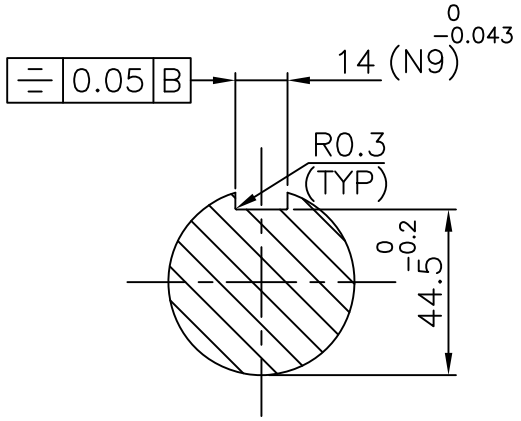

SECTION S2–S2

NOTES:

1. REMOVE ALL SHARP CORNERS AND BURRS.
2. TO BE HARDENED TO 40–45HRC.

DO NOT SCALE THE DRAWING
ASK IF IN DOUBT
UNLESS OTHERWISE SHOWN
ALL DIMENSIONS ARE IN MILLIMETERS
REMOVE SHARP EDGES & BURRS
CHAMFER 1 M.M. X 45°
MACHINING FINISH IN MICRONS :–
▽ 8 – 25 ▽▽ 1.6 – 8
▽▽▽ 0.025 – 1.6 ▽▽▽▽ < 0.025

DEVIATION FOR NON TOLERANCED DIMENSIONS (IS –2102)

DIAMETERS & LENGTHS	
UPTO & INCL. 6	+0.1
6 – 30	+0.2
30 – 120	+0.3
120 – 315	+0.5
315 – 1000	+0.8
1000 – 2000	+1.2
2000 – 4000	+2.0
4000 & ABOVE	+3.0

LENGTH IN M.M. OF SHORTER SIDE OF ANGLE UPTO & INCL.	
1– 6	± 1°–00'
6– 30	± 0°–30'
30–120	± 0°–20'
120–400	± 0°–10'

SPP

MATERIAL:	ROD En 24 Ø100 x 545
FINISH:	BLACKENING
DRAWN	R.S
DRG.CHKD	C.P.K.
APPROVED	M.P.

TITLE

SHAFT

SATISH DHAWAN SPACE CENTRE
SOLID PROPELLANT PLANT
I.S.R.O SRIHARIKOTA

PROJECTION

SCALE	DRG. NO.	DATE	SHEET
1 : 2	626-101-01-005-A3-R0	05.08.11	OF

REF. DRG. NO.
COM. FILE NO.

REF. DRG. NO.
COM. FILE NO.

3.2 (1.6)

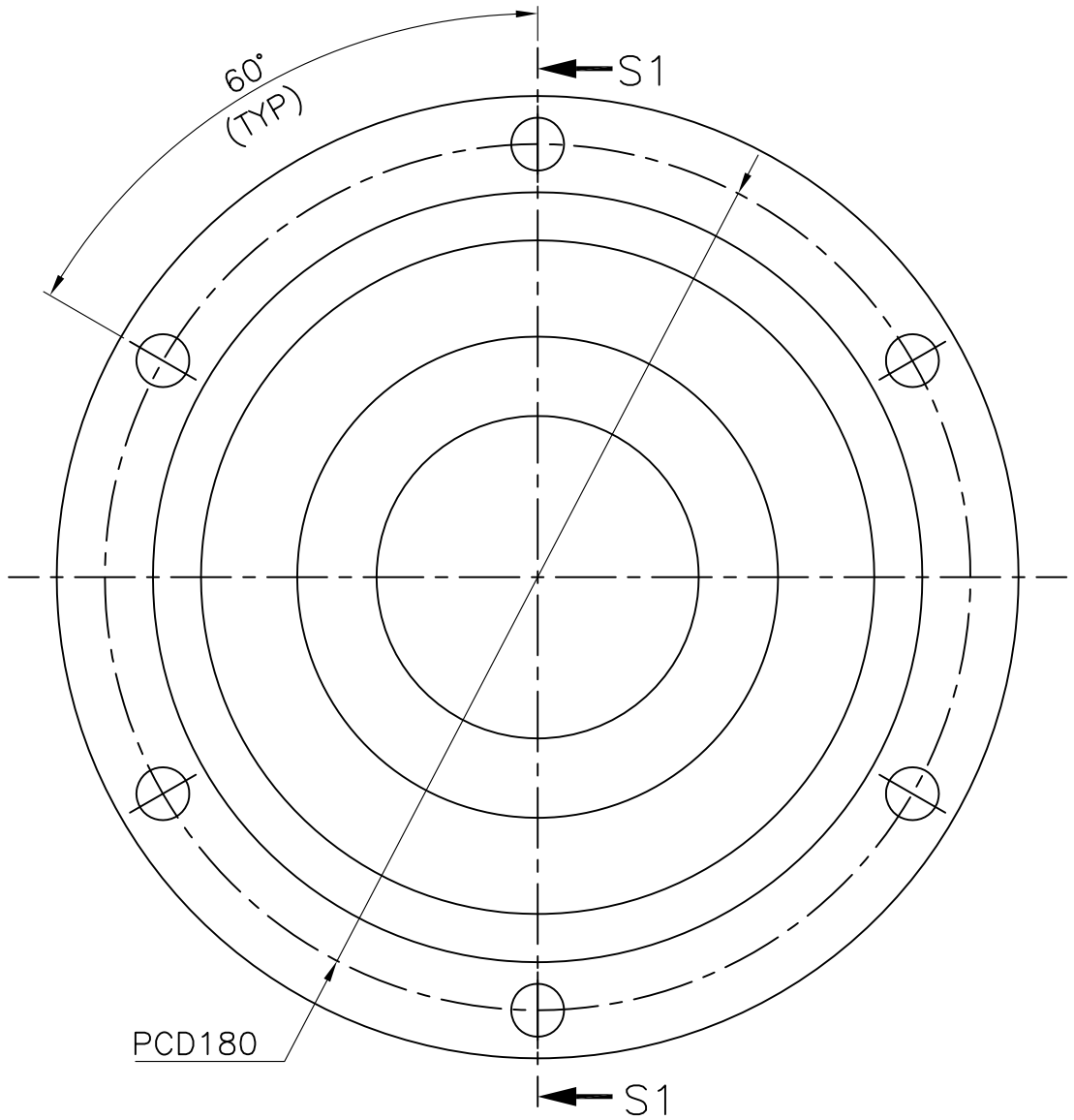

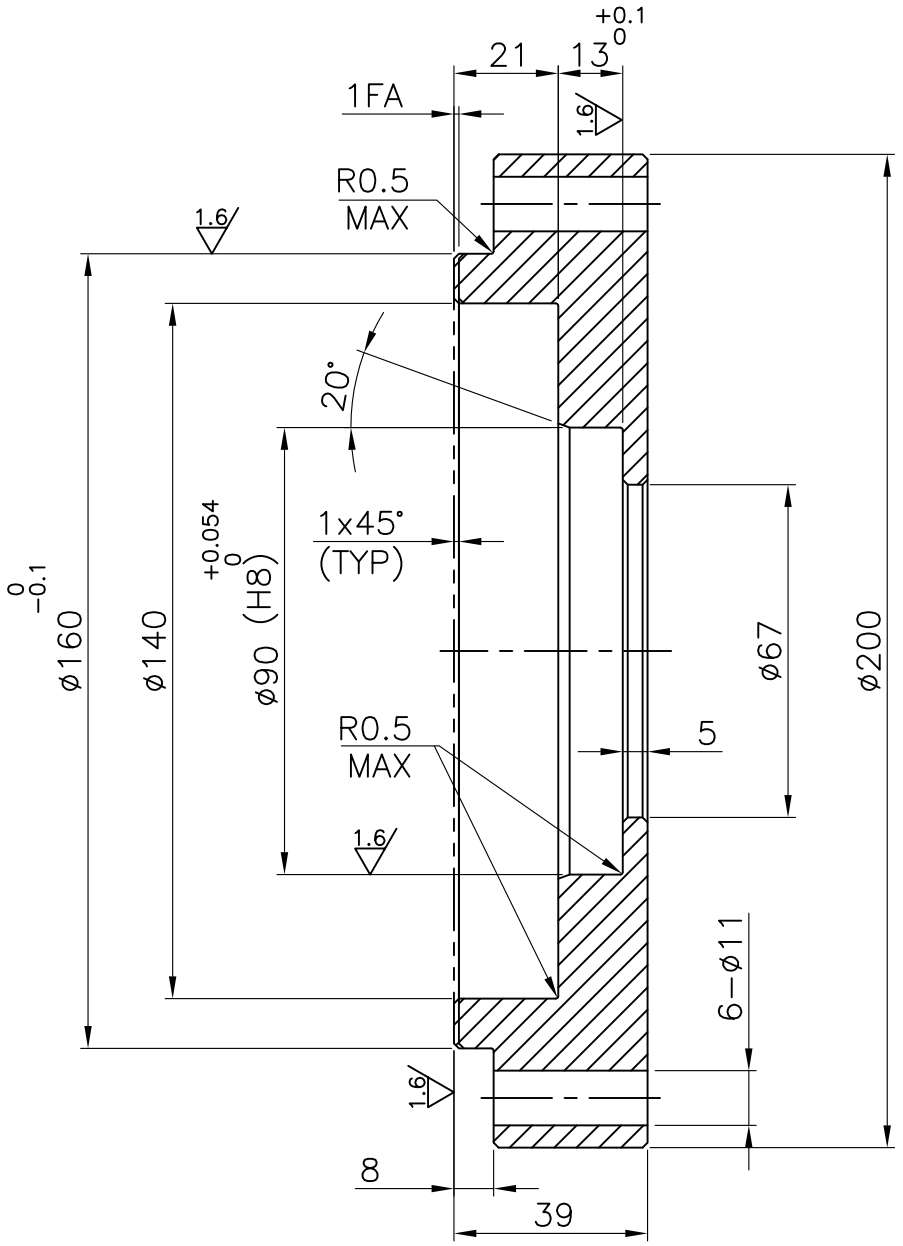

SECTION S1−S1

NOTES:

1. REMOVE ALL SHARP CORNERS AND BURRS.

DO NOT SCALE THE DRAWING
ASK IF IN DOUBT
UNLESS OTHERWISE SHOWN
ALL DIMENSIONS ARE IN MILLIMETERS
REMOVE SHARP EDGES & BURRS
CHAMFER 1 M.M. X 45°
MACHINING FINISH IN MICRONS :−
▽ 8 − 25 ▽▽ 1.6 − 8
▽▽▽ 0.025 − 1.6 ▽▽▽▽ < 0.025

DEVIATION FOR NON TOLERANCED DIMENSIONS (IS −2102)

DIAMETERS & LENGTHS		LENGTH IN M.M. OF SHORTER SIDE OF ANGLE UPTO & INCL.	
UPTO & INCL. 6	+0.1	1− 6	± 1°−00'
6 − 30	+0.2	6− 30	± 0°−30'
30 − 120	+0.3	30−120	± 0°−20'
120 − 315	+0.5	120−400	± 0°−10'
315 − 1000	+0.8		
1000 − 2000	+1.2		
2000 − 4000	+2.0		
4000 & ABOVE	+3.0		

SPP

MATERIAL:	IS 2062 Gr. B Ø205 x 45
FINISH:	PAINTING
DRAWN	R.S
DRG.CHKD	C.P.K.
APPROVED	M.P.

TITLE

END CAP

SATISH DHAWAN SPACE CENTRE
SOLID PROPELLANT PLANT
I.S.R.O SRIHARIKOTA

PROJECTION

SCALE	DRG. NO.	DATE	SHEET
1 : 1.5	626-101-01-006-A3-R0	05.08.11	OF

REF. DRG. NO.
COM. FILE NO.

3.2 (1.6)

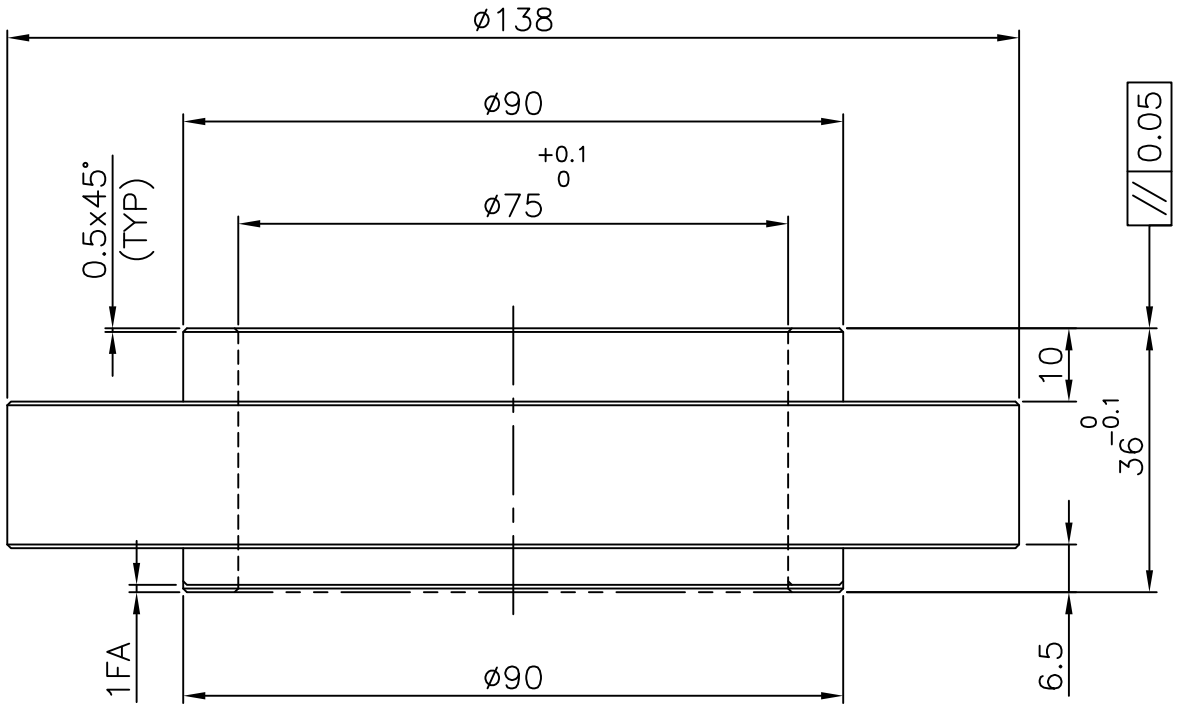

NOTES:

1. REMOVE ALL SHARP CORNERS AND BURRS.

DO NOT SCALE THE DRAWING
ASK IF IN DOUBT
UNLESS OTHERWISE SHOWN
ALL DIMENSIONS ARE IN MILLIMETERS
REMOVE SHARP EDGES & BURRS
CHAMFER 1 M.M. X 45°
MACHINING FINISH IN MICRONS :-
▽ 8 – 25 ▽▽ 1.6 – 8
▽▽▽ 0.025 – 1.6 ▽▽▽▽ < 0.025

DEVIATION FOR NON TOLERANCED DIMENSIONS (IS –2102)

DIAMETERS & LENGTHS	
UPTO & INCL. 6	+0.1
6 – 30	+0.2
30 – 120	+0.3
120 – 315	+0.5
315 – 1000	+0.8
1000 – 2000	+1.2
2000 – 4000	+2.0
4000 & ABOVE	+3.0

LENGTH IN M.M. OF SHORTER SIDE OF ANGLE UPTO & INCL.
1– 6 ± 1°–0'
6– 30 ± 0°–30'
30–120 ± 0°–20'
120–400 ± 0°–10'

SPP

MATERIAL:	IS 2062 Gr. B Ø 150 X 40
FINISH:	BLACKENING
DRAWN	R.S.
DRG.CHKD	C.P.K.
APPROVED	M.P.

TITLE

SPACER-A

SATISH DHAWAN SPACE CENTRE
SOLID PROPELLANT PLANT
I.S.R.O SRIHARIKOTA

PROJECTION

SCALE	DRG. NO.	DATE	SHEET
1 : 1	626-101-01-007-A4-R0	05.08.11	OF

REF. DRG. NO.
COM. FILE NO.

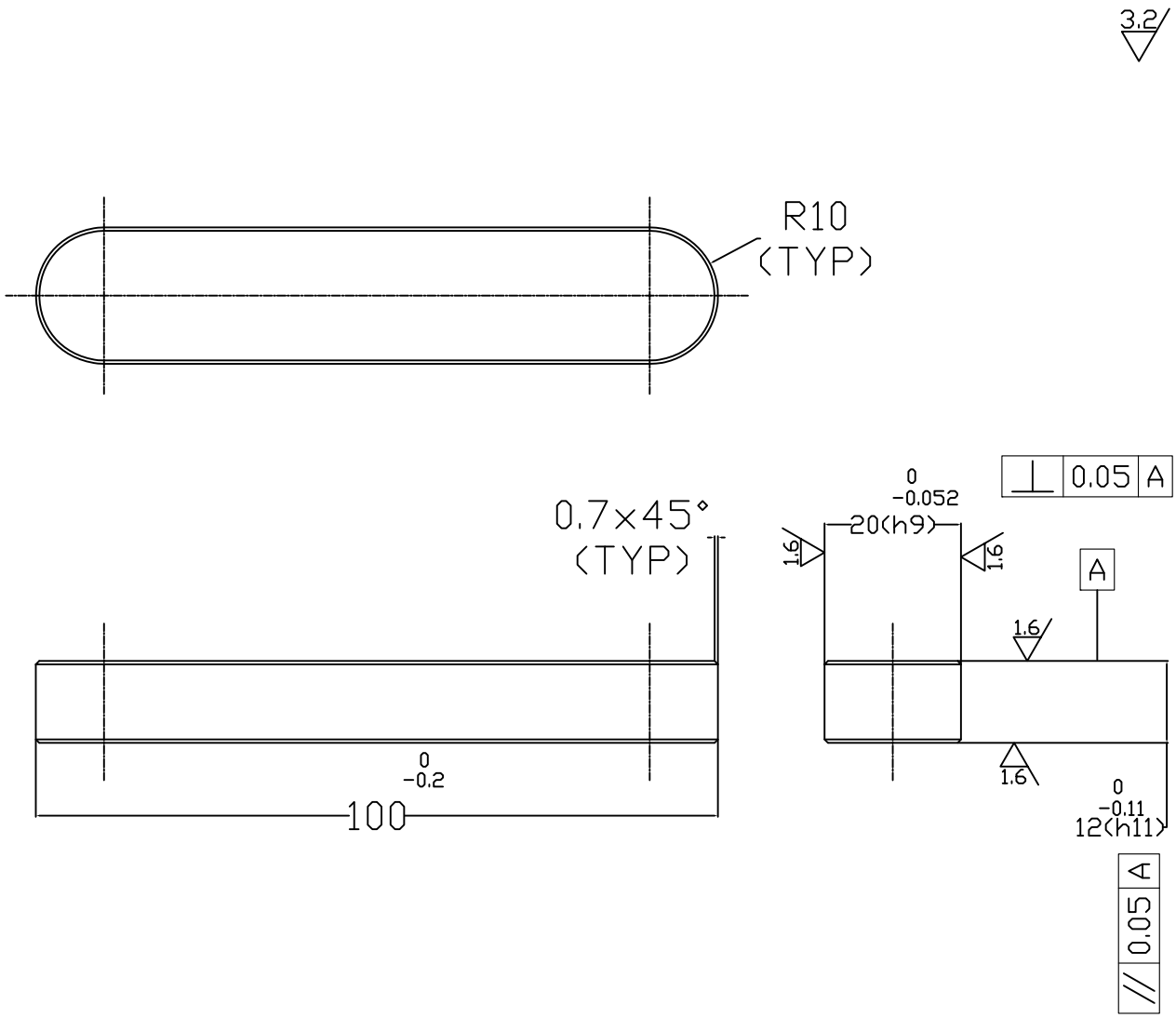

NOTES:

1. REMOVE ALL SHARP CORNERS AND BURRS.
2. QTY/ASSEMBLY: 1 No.
3. WEIGHT : 0.4 Kg.
4. KEY SHALL BE HARDENED AND TEMPERED TO (70-85Kg/mm^2) 22-24HRC

DO NOT SCALE THE DRAWING
ASK IF IN DOUBT
UNLESS OTHERWISE SHOWN
ALL DIMENSIONS ARE IN MILLIMETERS
REMOVE SHARP EDGES & BURRS
CHAMFER 1 M.M. X 45°
MACHINING FINISH IN MICRONS :-
▽ 8 – 25 ▽▽ 1.6 – 8
▽▽▽ 0.025 – 1.6 ▽▽▽▽ < 0.025

DEVIATION FOR NON TOLERANCED DIMENSIONS (IS –2102)

DIAMETERS & LENGTHS		LENGTH IN M.M. OF SHORTER SIDE OF ANGLE UPTO & INCL.	
UPTO & INCL. 6	+0.1	1– 6	± 1°–0'
6 – 30	+0.2	6– 30	± 0°–30'
30 – 120	+0.3	30–120	± 0°–20'
120 – 315	+0.5	120–400	± 0°–10'
315 – 1000	+0.8		
1000 – 2000	+1.2		
2000 – 4000	+2.0		
4000 & ABOVE	+3.0		

SPP

MATERIAL:	IS 2048 Gr. B 105 X 25 X 15 THK
FINISH:	
DRAWN	R.S.
DRG.CHKD	C.P.K.
APPROVED	M.P.

TITLE

KEY

SATISH DHAWAN SPACE CENTRE
SOLID PROPELLANT PLANT
I.S.R.O SRIHARIKOTA

SCALE	DRG. NO.	DATE	PROJECTION
1 : 1	626-101-01-008-A4-R0	02.08.11	SHEET OF

REF. DRG. NO.
COM. FILE NO.

3.2

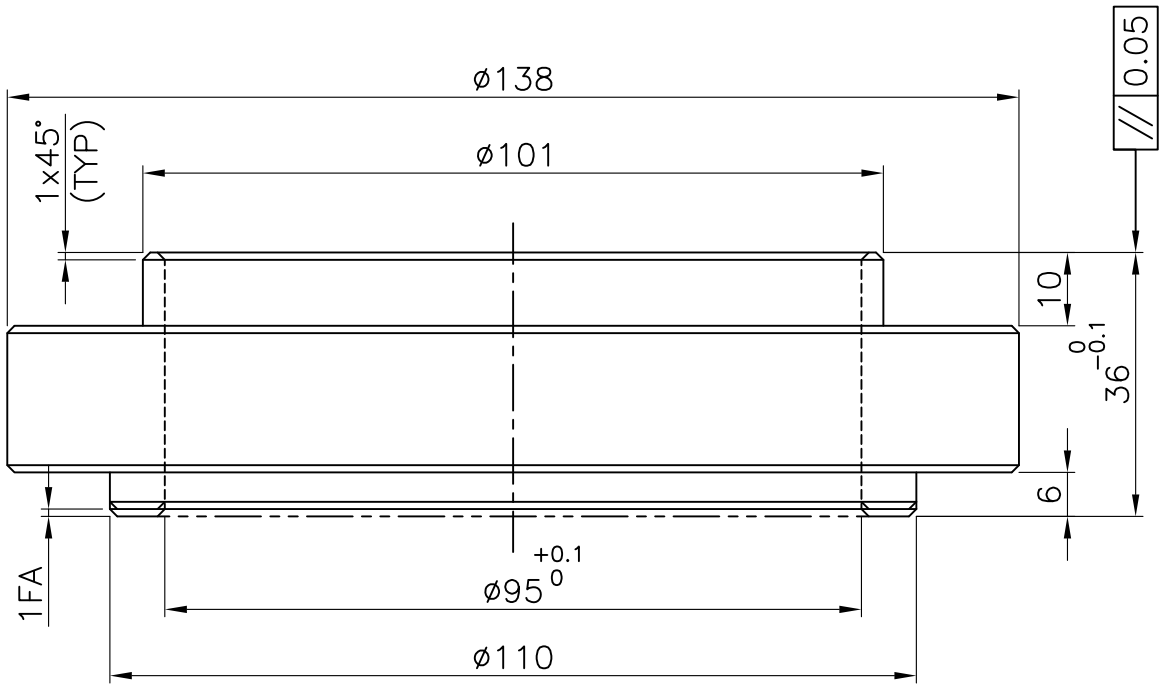

NOTES:

1. REMOVE ALL SHARP CORNERS AND BURRS.

DO NOT SCALE THE DRAWING
ASK IF IN DOUBT
UNLESS OTHERWISE SHOWN
ALL DIMENSIONS ARE IN MILLIMETERS
REMOVE SHARP EDGES & BURRS
CHAMFER 1 M.M. X 45°
MACHINING FINISH IN MICRONS :-
▽ 8 – 25 ▽▽ 1.6 – 8
▽▽▽ 0.025 – 1.6 ▽▽▽▽ < 0.025

DEVIATION FOR NON TOLERANCED DIMENSIONS (IS –2102)

DIAMETERS & LENGTHS	
UPTO & INCL. 6	+0.1
6 – 30	+0.2
30 – 120	+0.3
120 – 315	+0.5
315 – 1000	+0.8
1000 – 2000	+1.2
2000 – 4000	+2.0
4000 & ABOVE	+3.0

LENGTH IN M.M. OF SHORTER SIDE OF ANGLE UPTO & INCL.	
1– 6	± 1°–0'
6– 30	± 0°–30'
30–120	± 0°–20'
120–400	± 0°–10'

SPP

MATERIAL: IS:2062 Gr. B Ø150 x 40
FINISH: BLACKENING
DRAWN: R.S
DRG.CHKD: C.P.K.
APPROVED: M.P.

TITLE: SPACER-B

SATISH DHAWAN SPACE CENTRE
SOLID PROPELLANT PLANT
I.S.R.O SRIHARIKOTA

SCALE	DRG. NO.	DATE	PROJECTION
1 : 1	626-101-01-009-A4-R0	05.08.11	SHEET OF

REF. DRG. NO.
COM. FILE NO.

3.2

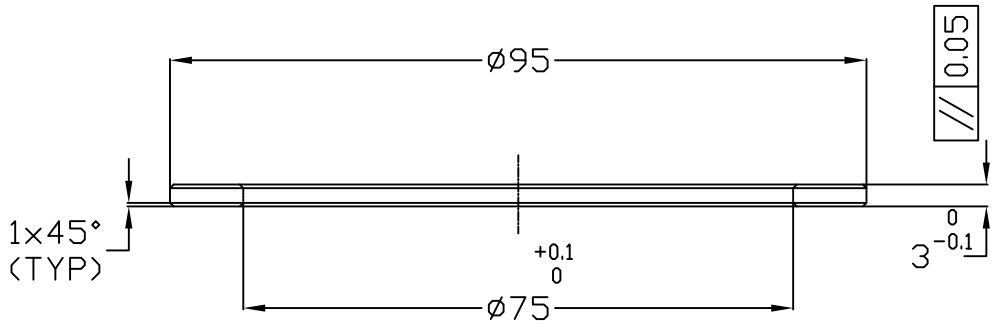

NOTES:

1. REMOVE ALL SHARP CORNERS AND BURRS.

DO NOT SCALE THE DRAWING
ASK IF IN DOUBT
UNLESS OTHERWISE SHOWN
ALL DIMENSIONS ARE IN MILLIMETERS
REMOVE SHARP EDGES & BURRS
CHAMFER 1 M.M. X 45°
MACHINING FINISH IN MICRONS :-
▽ 8 – 25 ▽▽ 1.6 – 8
▽▽▽ 0.025 – 1.6 ▽▽▽▽ < 0.025

DEVIATION FOR NON TOLERANCED DIMENSIONS (IS –2102)

DIAMETERS & LENGTHS	
UPTO & INCL. 6	+0.1
6 – 30	+0.2
30 – 120	+0.3
120 – 315	+0.5
315 – 1000	+0.8
1000 – 2000	+1.2
2000 – 4000	+2.0
4000 & ABOVE	+3.0

LENGTH IN M.M. OF SHORTER SIDE OF ANGLE UPTO & INCL.	
1– 6	± 1°–0'
6– 30	± 0°–30'
30–120	± 0°–20'
120–400	± 0°–10'

SPP

MATERIAL: IS 2062 Gr. B Ø 100 X 5
FINISH: BLACKENING
DRAWN: R.S
DRG.CHKD: C.P.K.
APPROVED: M.P.

TITLE: SPACER-C

SATISH DHAWAN SPACE CENTRE
SOLID PROPELLANT PLANT
I.S.R.O SRIHARIKOTA

SCALE	DRG. NO.	DATE	PROJECTION
1 : 1	626-101-01-010-A4-R0	05.08.11	SHEET OF

REF. DRG. NO.
COM. FILE NO.

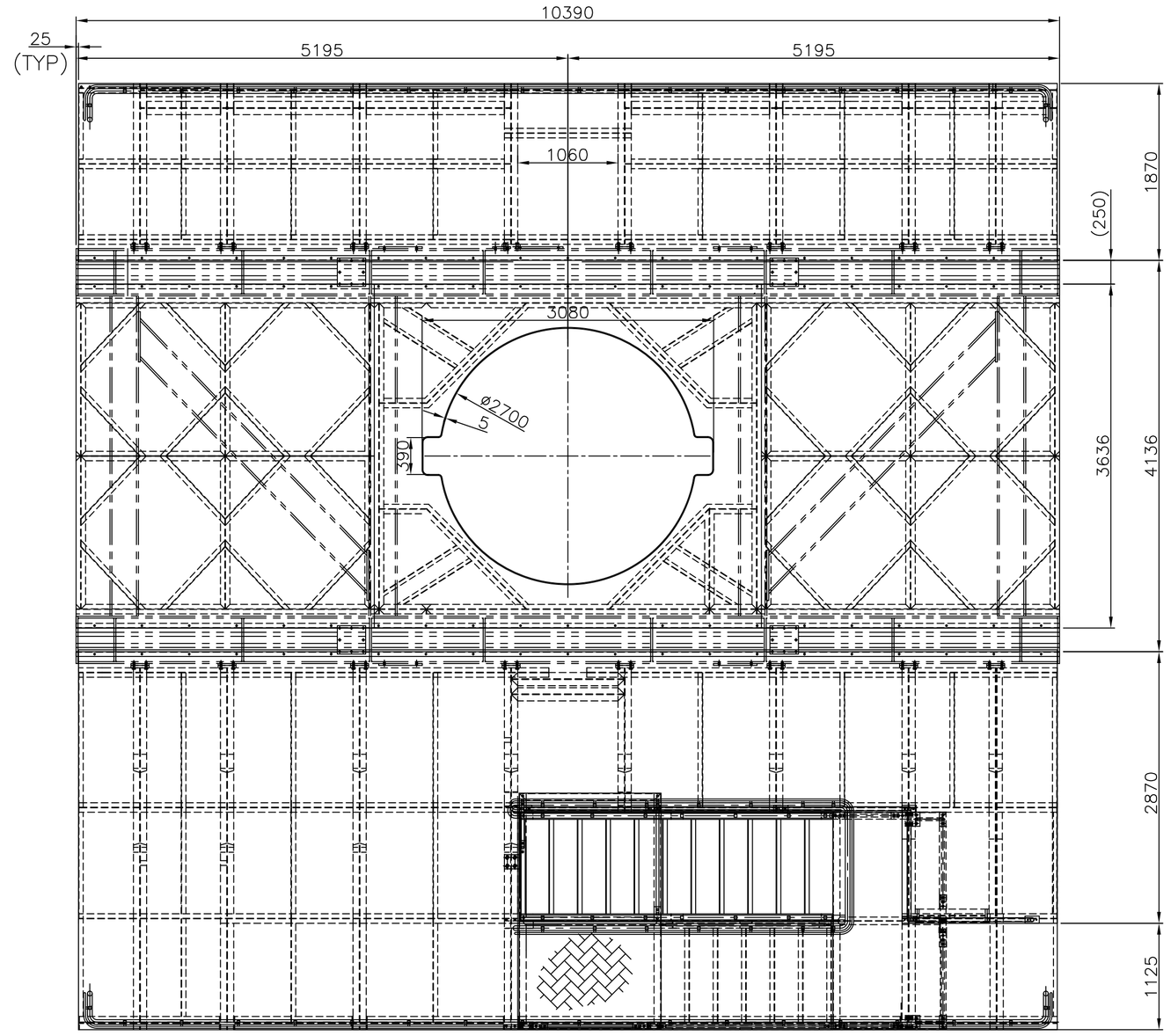

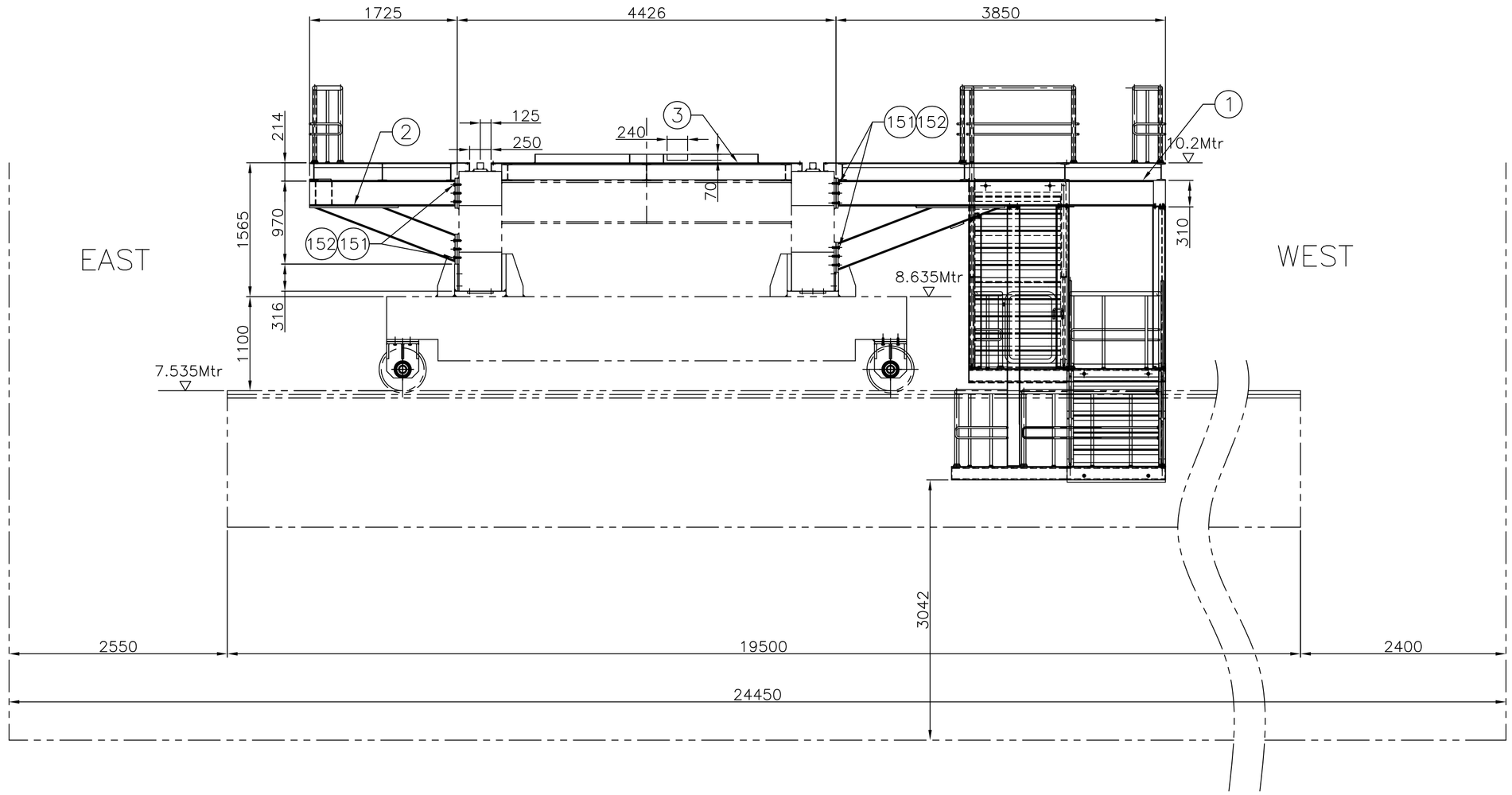

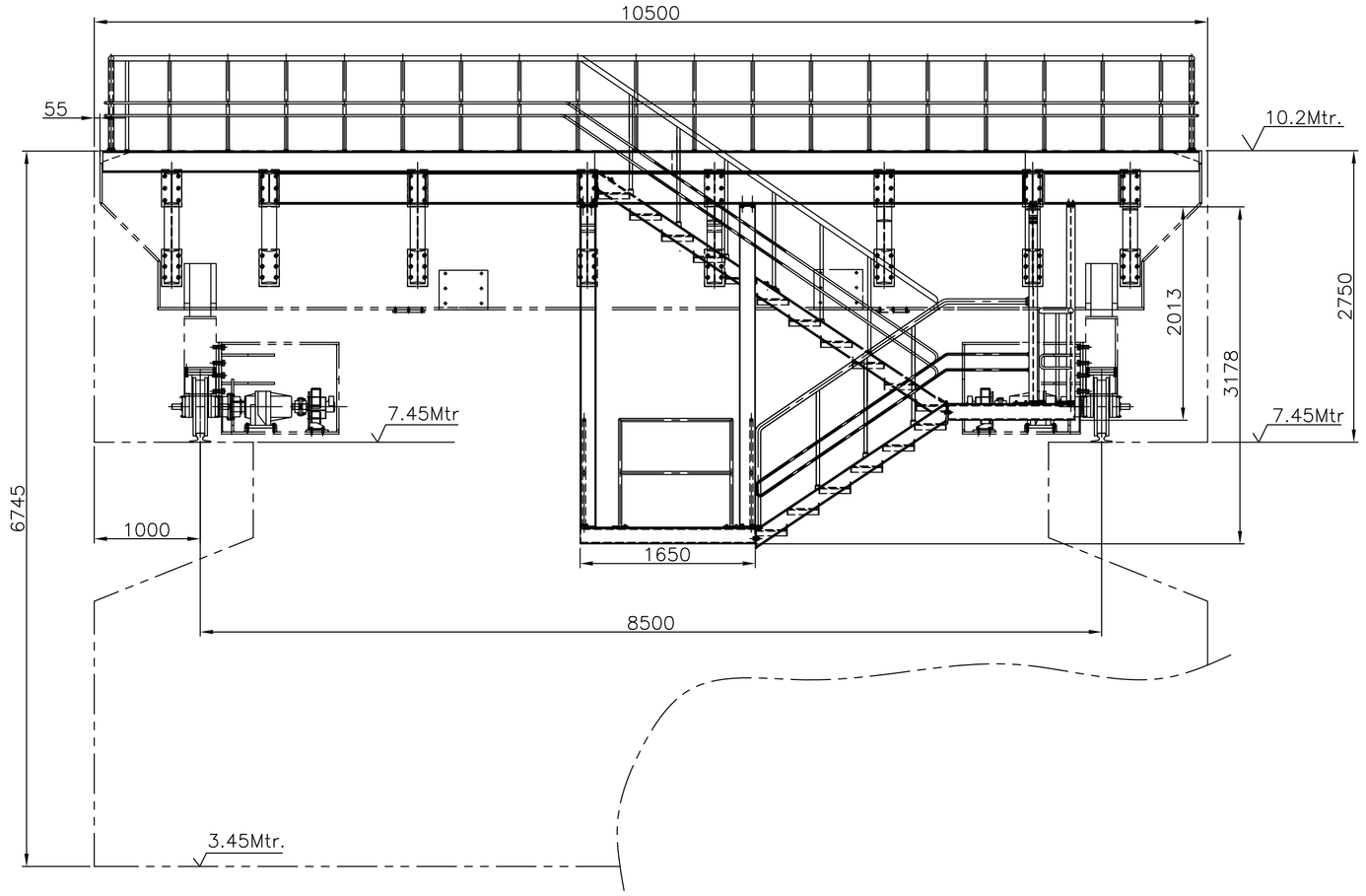

PART NO.	DESCRIPTION	MATERIAL	SPECIFICATION	QTY.
152	PLAIN WASHER	IS:5370-1969	M20	192
151	HEX. HEAD SCREW	IS:1363-1967	M20x70	192
3	UPPER DECK PLATES & UPPER DECK MIDDLE	REFER DWG.	626-103-03-001-A2-R0	01
2	UPPER DECK EAST	REFER DWG.	626-103-02-001-A3-R0	01
1	STAIRS ASSEMBLY	REFER DWG.	626-103-01-001-A1-R0	01

DO NOT SCALE THE DRAWING
ASK IF IN DOUBT
UNLESS OTHERWISE SHOWN
ALL DIMENSIONS ARE IN MILLIMETERS
REMOVE SHARP EDGES & BURRS
CHAMFER 1 M.M. X 45°
MACHINING FINISH IN MICRONS :-
▽ 8 – 25 ▽▽ 1.6 – 8
▽▽▽ 0.025 – 1.6 ▽▽▽▽ < 0.025

DEVIATION FOR NON TOLERANCED DIMENSIONS (IS -2102)

DIAMETERS & LENGTHS UPTO & INCL.		LENGTH IN M.M. OF SHORTER SIDE OF ANGLE UPTO & INCL.
6	+0.1	1- 6 ± 1°-0'
30	+0.2	6- 30 ± 0°-30'
120	+0.3	30-120 ± 0°-20'
315	+0.5	120-400 ± 0°-10'
1000	+0.8	
2000	+1.2	
4000	+2.0	
& ABOVE	+3.0	

SPP

MATERIAL: REF BOM
FINISH: PAINTING
DRAWN: R.S
DRG.CHKD: C.P.K.
APPROVED: M.P.

TITLE: DECK AND STAIR CASE ASSEMBLY

SATISH DHAWAN SPACE CENTRE
SOLID PROPELLANT PLANT
I.S.R.O SRIHARIKOTA

PROJECTION

SCALE: 1 : 40
DRG. NO.: 626-103-00-001-A1-R0
DATE: 05.08.11
SHEET OF

REF. DRG. NO.
COM. FILE NO.

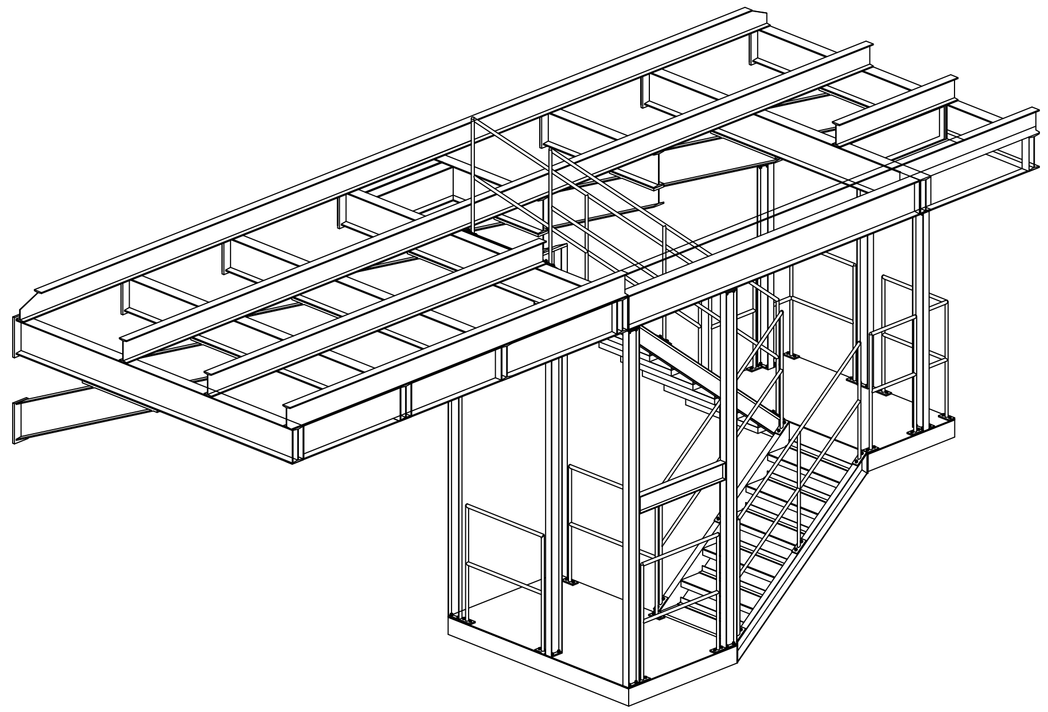

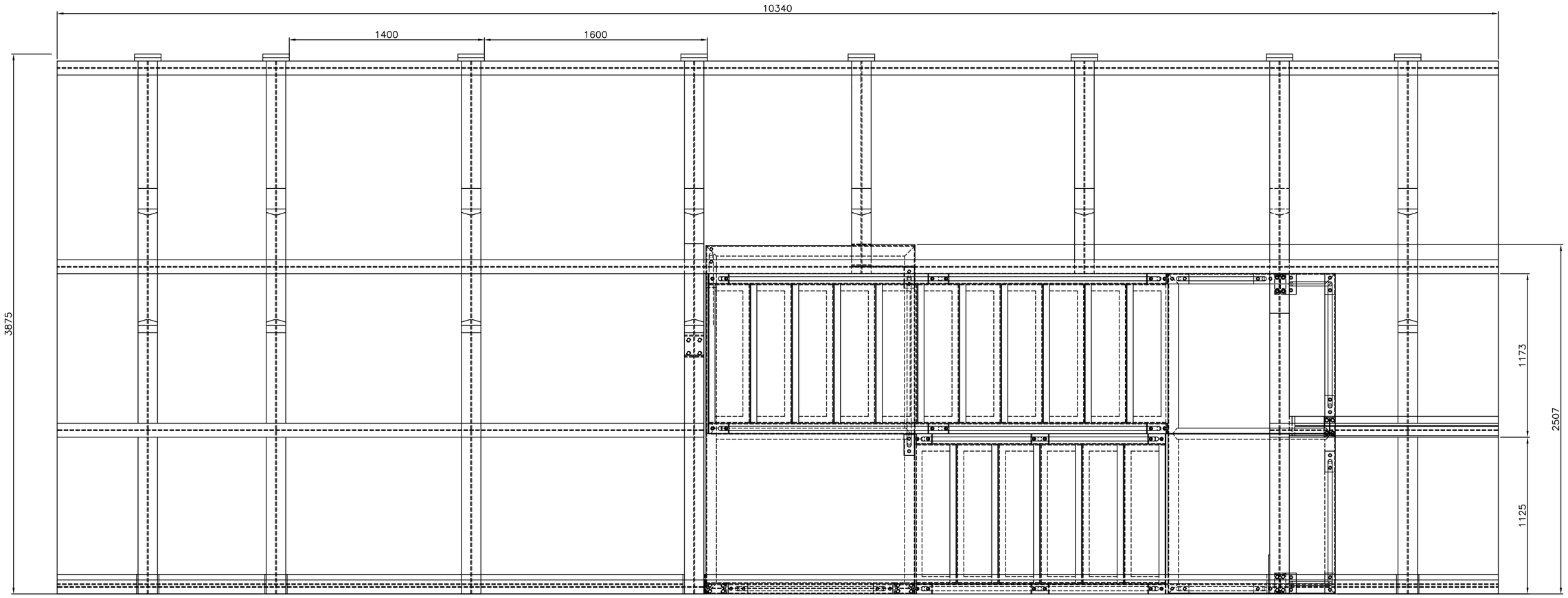

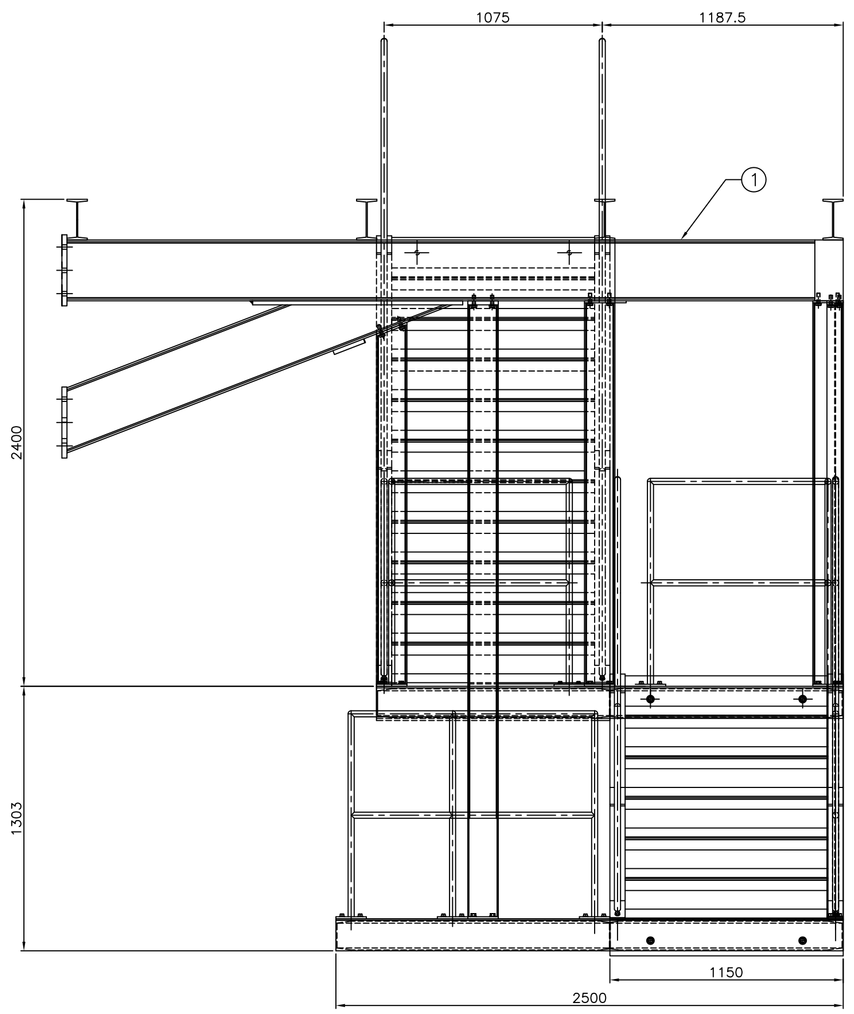

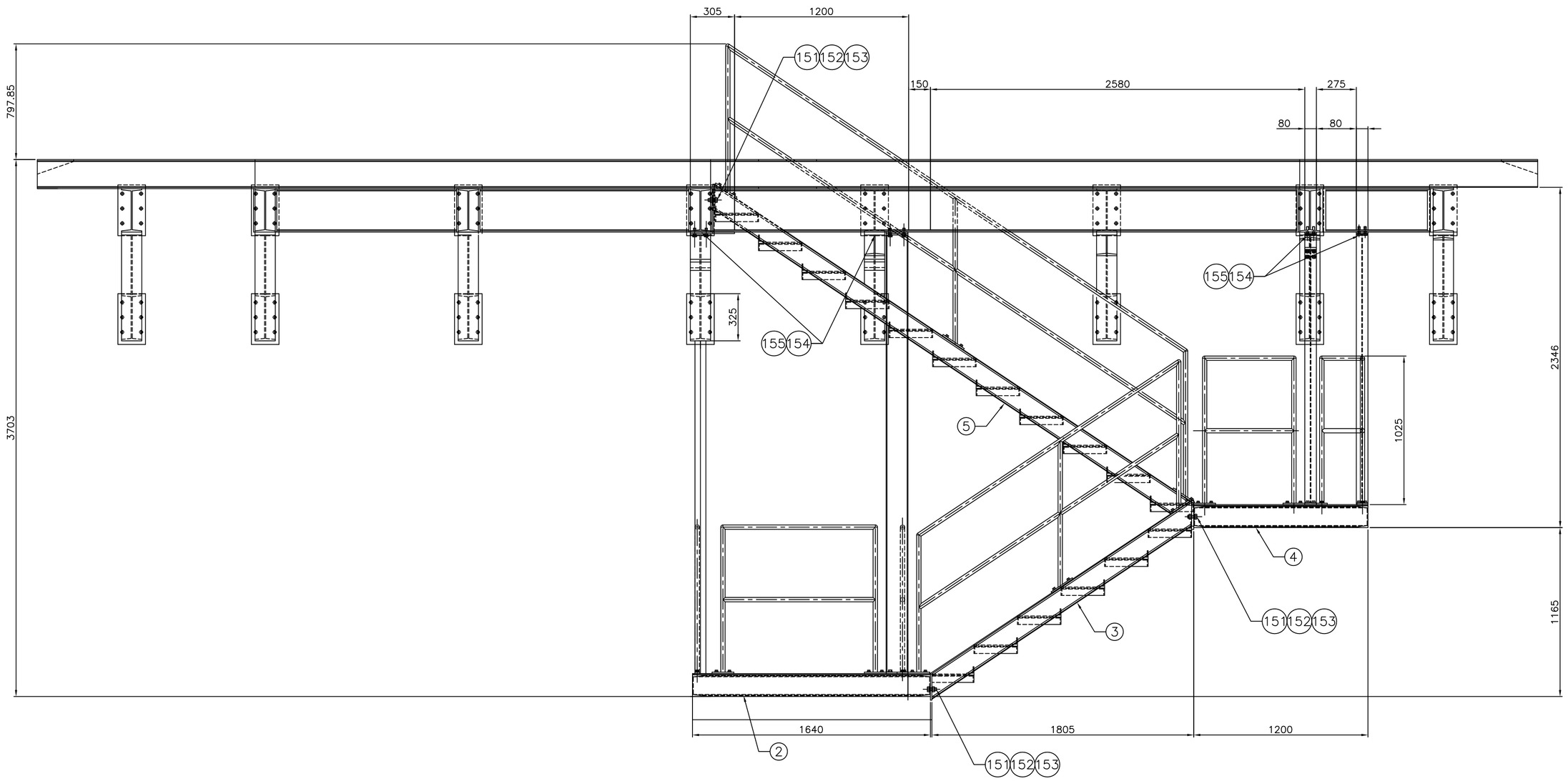

NO. PART	DESCRIPTION	MATERIAL	SPECIFICATION	QTY.
155	PLAIN WASHER	IS:5370 1969	M16	24
154	HEX. HEAD SCREW	IS:1363 1967	M16 x 50	24
153	PLAIN WASHER	IS:5370 1969	M20	12
152	HEX. NUT	IS:1363 1967	M20	06
151	HEX. HEAD SCREW	IS:1363 1967	M20 x 60	06
5	UPPER STAIR	REFER DWG.	626-103-01-003-A1-R0	01
4	UPPER LANDING	REFER DWG.	626-103-01-003-A1-R0	01
3	MIDDLE STAIR	REFER DWG.	626-103-01-003-A1-R0	01
2	MIDDLE LANDING	REFER DWG.	626-103-01-003-A1-R0	01
1	UPPER DECK WEST	REFER DWG.	626-103-01-002-A1-R0	01

DO NOT SCALE THE DRAWING
ASK IF IN DOUBT
UNLESS OTHERWISE SHOWN
ALL DIMENSIONS ARE IN MILLIMETERS
REMOVE SHARP EDGES & BURRS
CHAMFER 1 M.M. X 45°
MACHINING FINISH IN MICRONS :-
▽ 8 – 25 ▽▽ 1.6 – 8
▽▽▽ 0.025 – 1.6 ▽▽▽▽ < 0.025

DEVIATION FOR NON TOLERANCED DIMENSIONS (IS -2102)

DIAMETERS & LENGTHS	
UPTO & INCL. 6	+0.1
6 – 30	+0.2
30 – 120	+0.3
120 – 315	+0.5
315 – 1000	+0.8
1000 – 2000	+1.2
2000 – 4000	+2.0
4000 & ABOVE	+3.0

LENGTH IN M.M. OF SHORTER SIDE OF ANGLE UPTO & INCL.	
1– 6	± 1°–00′
6– 30	± 0°–30′
30–120	± 0°–20′
120–400	± 0°–10′

SPP

TITLE: STAIRS ASSEMBLY

SATISH DHAWAN SPACE CENTRE
SOLID PROPELLANT PLANT
I.S.R.O SRIHARIKOTA

MATERIAL:	REF BOM
FINISH:	
DRAWN	R.S
DRG.CHKD	C.P.K.
APPROVED	M.P.
SCALE	1 : 20
DRG. NO.	626-103-01-001-A1-R0
DATE	05.08.11
PROJECTION	
SHEET	
OF	

REF. DRG. NO.

COM. FILE NO.

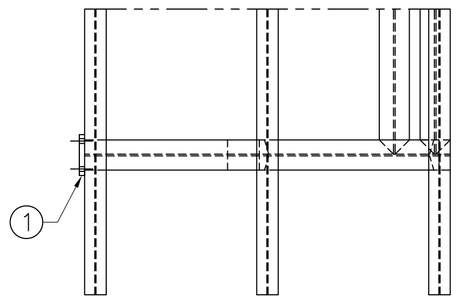

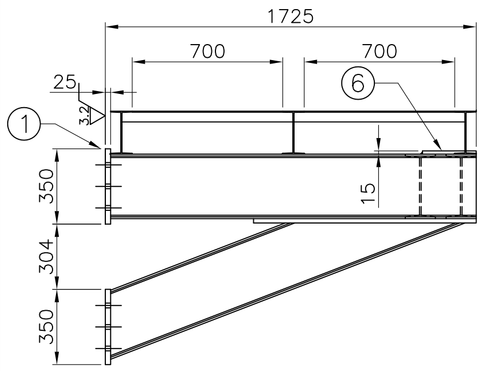

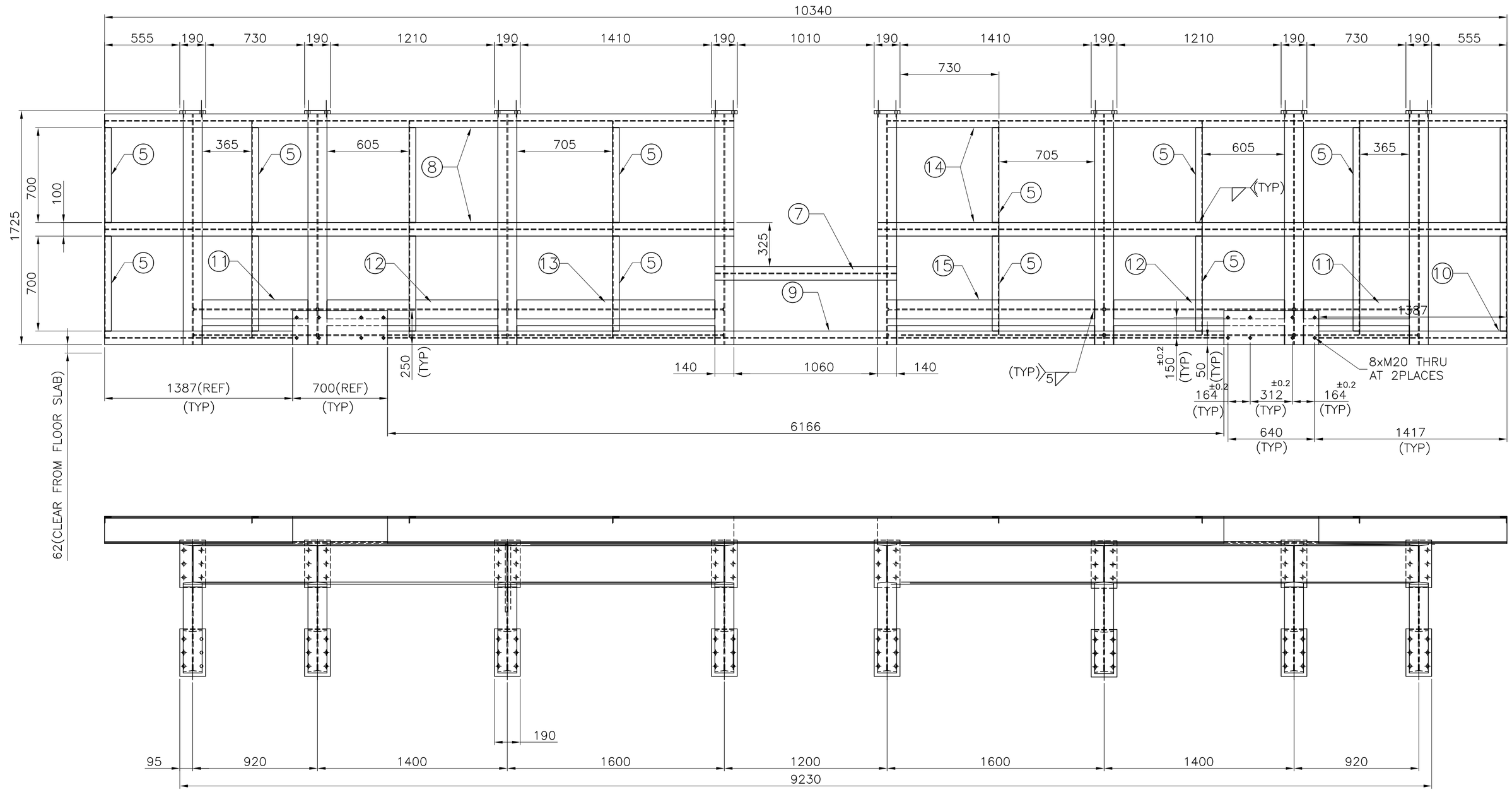

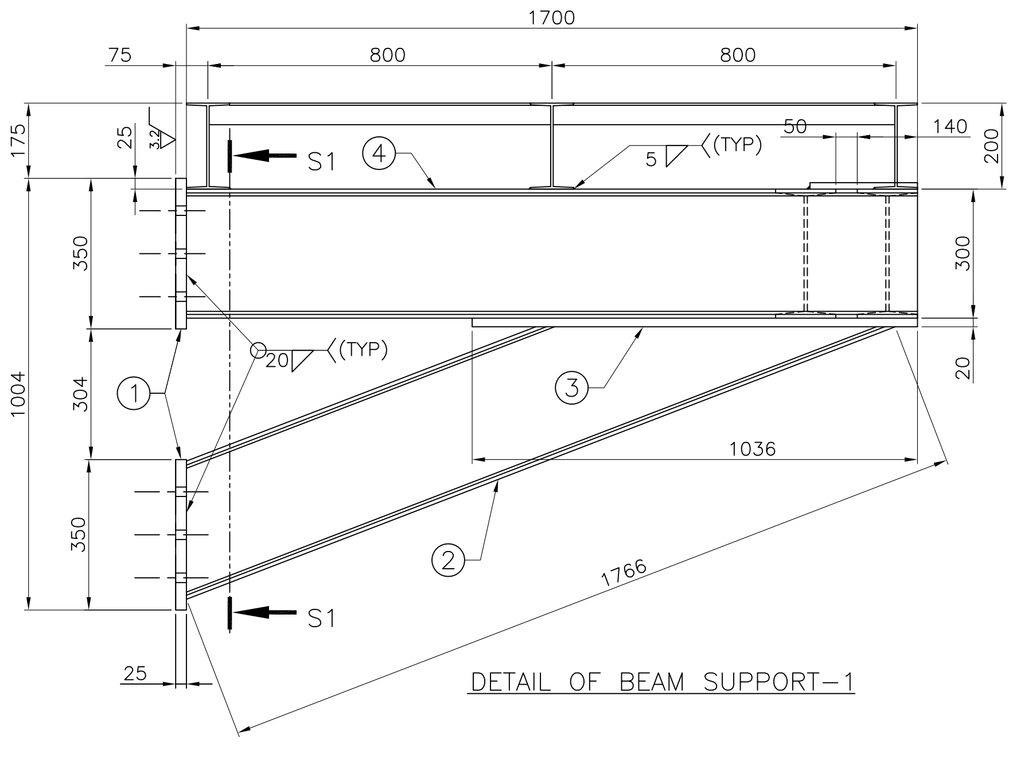

DETAIL OF BEAM SUPPORT–1

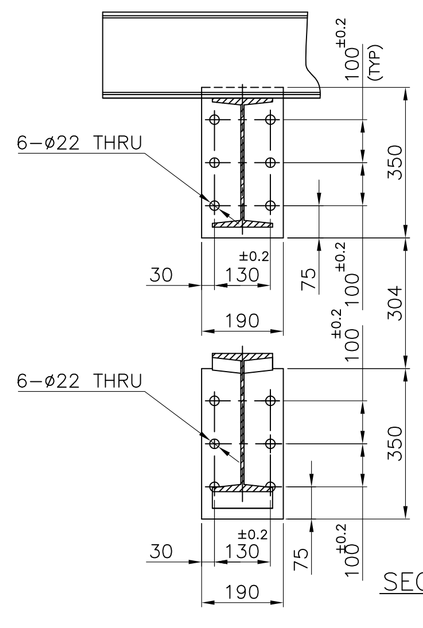

SECTION S1–S1

SCALE 1:10

BILL OF MATERIAL				
ITEM NO.	DESCRIPTION	MATERIAL	SPECIFICATION	QTY.
1	PLATE	IS:2062 Gr.B	30THKx190x350Lg	16
2	I–BEAM	IS:808	ISMB 300x140x1770Lg	08
3	PLATE	IS:2062 Gr.B	20THKx140x1036Lg	08
4	I–BEAM	IS:808	ISMB 300x140x1700Lg	08
5	ANGLE	IS:2062	ISA 50x50x5 L:794	16
6	PLATE	IS:2062 Gr.B	20THKx705x255Lg	02
7	I–BEAM	IS:808	ISMB 200x100x1440Lg	01
8	I–BEAM	IS:808	ISMB 200x100x4640Lg	02
9	I–BEAM	IS:808	ISMB 200x100x6170Lg	01
10	I–BEAM	IS:808	ISMB 200x100x1395Lg	02
11	I–BEAM	IS:808	ISMB 300x140x913Lg	04
12	I–BEAM	IS:808	ISMB 300x140x1392Lg	04
13	I–BEAM	IS:808	ISMB 300x140x1592Lg	02
14	I–BEAM	IS:808	ISMB 200x100x4640Lg	02
15	I–BEAM	IS:808	ISMB 300x140x1492Lg	02

NOTES:

1. WEIGHT : 2795Kgs.
2. QTY/ASSY. : 01Nos.
3. REMOVE ALL SHARP CORNERS AND BURRS.
4. STRUCTURAL WELDS SHALL BE OF FULL PENETRATION WELDS.
5. THE UPPER DECK SHALL BE ATTACHED TO THE WORKING PLATFORM STRUCTURE AT ASSEMBLY BY WELDING THE PADS TO THE BEAMS OF THE WORKING PLATFORM STRUCTURE.
6. AFTER ATTACHING THE PADS THE BEAMS MAY BE DETACHED BY REMOVING THE SCREWS FOR PAINTING AND FINISHING.

DO NOT SCALE THE DRAWING
ASK IF IN DOUBT
UNLESS OTHERWISE SHOWN
ALL DIMENSIONS ARE IN MILLIMETERS
REMOVE SHARP EDGES & BURRS
CHAMFER 1 M.M. X 45°
MACHINING FINISH IN MICRONS :–
▽ 8 – 25 ▽▽ 1.6 – 8
▽▽▽ 0.025 – 1.6 ▽▽▽▽ < 0.025

DEVIATION FOR NON TOLERANCED DIMENSIONS (IS –2102)

DIAMETERS & LENGTHS	
UPTO & INCL. 6	+0.1
6 – 30	+0.2
30 – 120	+0.3
120 – 315	+0.5
315 – 1000	+0.8
1000 – 2000	+1.2
2000 – 4000	+2.0
4000 & ABOVE	+3.0

LENGTH IN M.M. OF SHORTER SIDE OF ANGLE UPTO & INCL.	
1– 6	± 1°–00'
6– 30	± 0°–30'
30–120	± 0°–20'
120–400	± 0°–10'

SPP

MATERIAL:	REF NOTE NO.1 Ø555x140
FINISH:	PAINTING
DRAWN	R.S
DRG.CHKD	C.P.K.
APPROVED	M.P.

TITLE

UPPER DECK EAST

SATISH DHAWAN SPACE CENTRE
SOLID PROPELLANT PLANT
I.S.R.O SRIHARIKOTA

PROJECTION

SCALE	DRG. NO.	DATE	SHEET
1 : 20	626-103-02-001-A3-R0	05.08.11	OF

REF. DRG. NO.

COM. FILE NO.

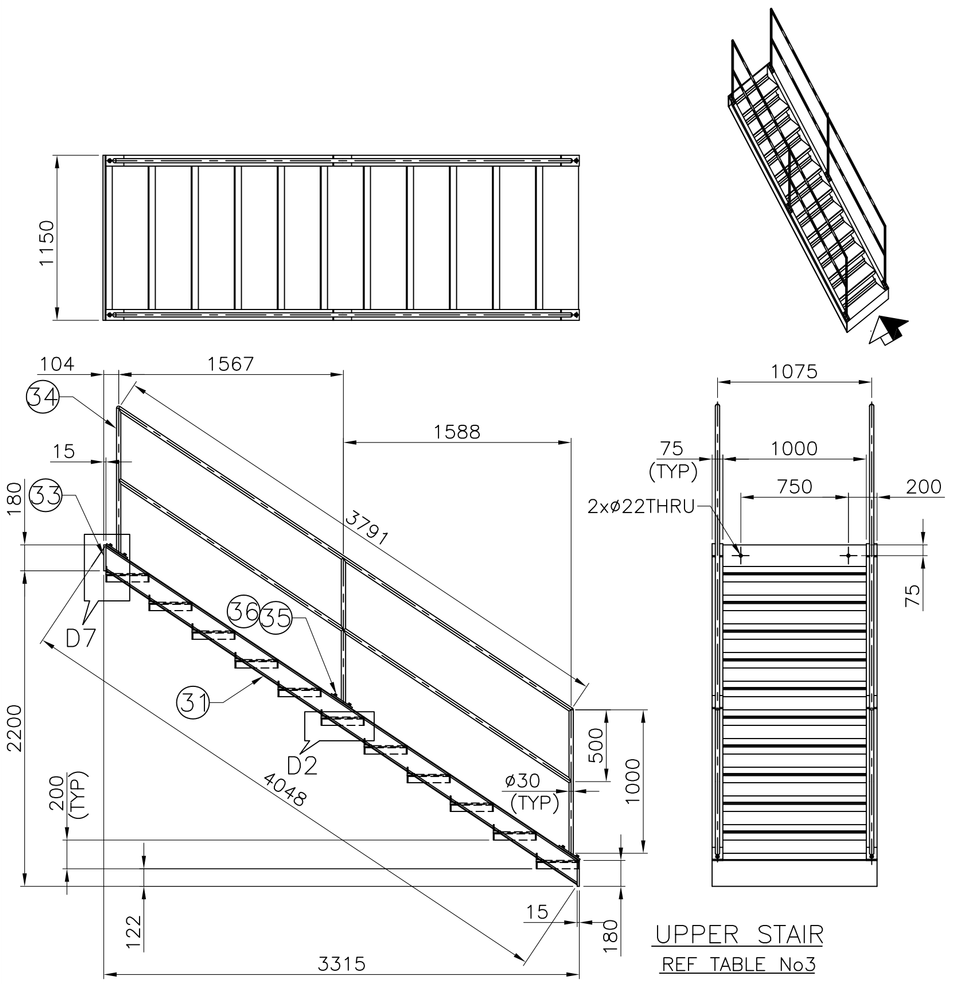

UPPER STAIR

REF TABLE No3

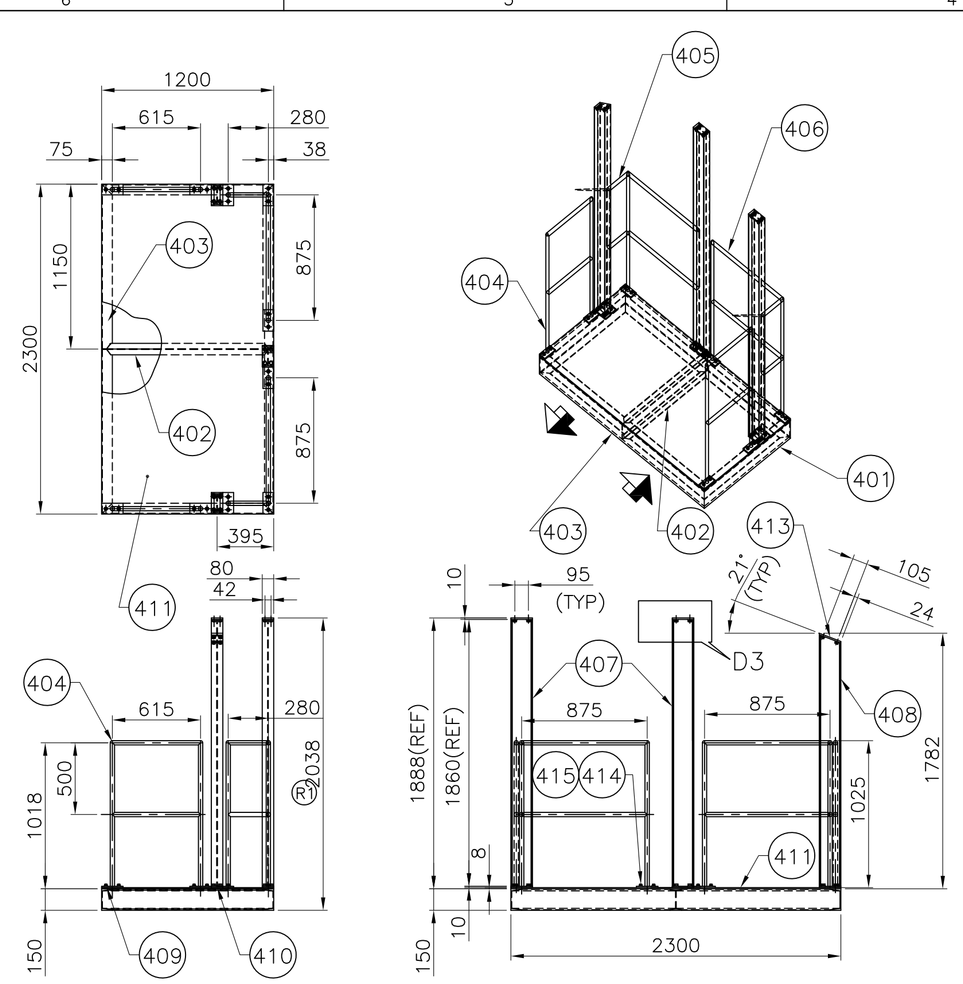

UPPER LANDING

REF TABLE No4

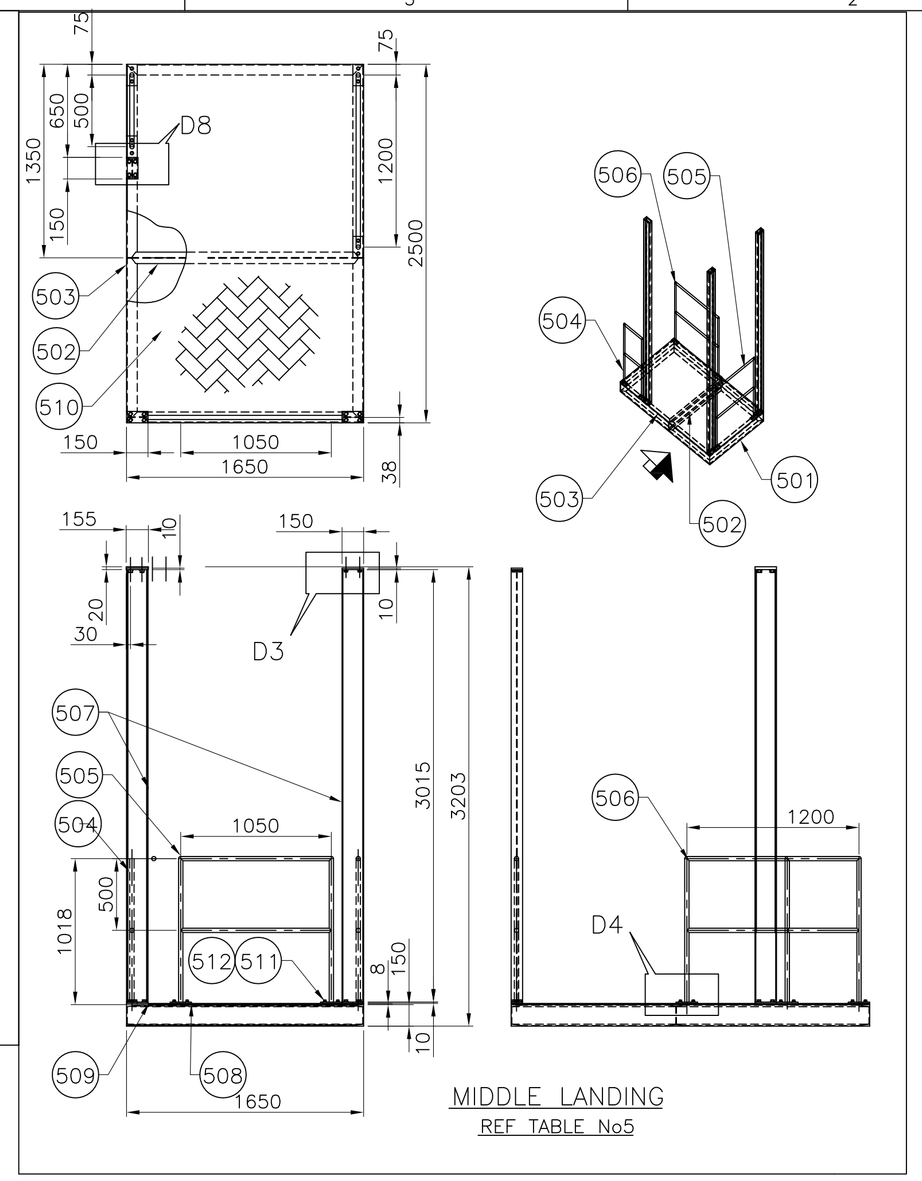

MIDDLE LANDING

REF TABLE No5

(TABLE NO.1)

BILL OF MATERIAL

ITEM NO.	DESCRIPTION	MATERIAL	QTY.	REMARKS
110	ANGLE 50x50x6THKx300Lg	IS:808	34	
111	ANGLE 50x50x6THKx1000Lg	IS:808	51	
112	CHEQUERED PLATE 6THKx300x1000Lg	IS:2062 GRADE B	17	

MIDDLE STAIR (TABLE NO.2)

BILL OF MATERIAL

ITEM NO.	DESCRIPTION	MATERIAL	QTY.	REMARKS
21	CHANNEL ISMC150x75x2251Lg	IS:808	02	
22	PLATE 10THKx75x175Lg	IS:2062 GRADE B	06	
23	PLATE 15THKx180x1150Lg	IS:2062 GRADE B	02	
24	HANDRAIL	COS TUBE	02	
25	HEX.HD.SCR. M12x20Lg	IS:1364	12	
26	WASHER FOR M12	IS:2016	12	

UPPER STAIR (TABLE NO.3)

BILL OF MATERIAL

ITEM NO.	DESCRIPTION	MATERIAL	QTY.	REMARKS
31	CHANNEL ISMC150x75x4048Lg	IS:808	02	
32	PLATE 10THKx75x175Lg	IS:2062 GRADE B	06	
33	PLATE 15THKx180x1150Lg	IS:2062 GRADE B	02	
34	HANDRAIL	COS TUBE	02	
35	HEX.HD.SCR. M12x20Lg	IS:1364	12	
36	WASHER FOR M12	IS:2016	12	

UPPER LANDING (TABLE NO.4)

BILL OF MATERIAL

ITEM NO.	DESCRIPTION	MATERIAL	QTY.	REMARKS
401	CHANNEL ISMC150x75x1200Lg	IS:808	02	
402	CHANNEL ISMC150x75x1189Lg	IS:808	01	
403	CHANNEL ISMC150x75x2300Lg	IS:808	02	
404	HANDRAIL	COS TUBE	02	
405	HANDRAIL	COS TUBE	01	
406	HANDRAIL	COS TUBE	01	
407	I–BEAM ISMB150x80x1880Lg	IS:808	02	
408	I–BEAM ISMB150x80x1760Lg	IS:808	01	
409	PLATE 10THKx75x150Lg	IS:2062 GRADE B	10	
410	PLATE 10THKx80x150Lg	IS:2062 GRADE B	03	
411	CHEQUERED PLATE 6THKx1200x2300Lg	IS:2062 GRADE B	01	
412	PLATE 10THKx80x150Lg	IS:2062 GRADE B	08	
413	PLATE 10THKx80x160Lg	IS:2062 GRADE B	01	
414	HEX.HD.SCR. M12x20Lg	IS:1364	32	
415	PLAIN WASHER FOR M12	IS:2016	32	

MIDDLE LANDING (TABLE NO.5)

BILL OF MATERIAL

ITEM NO.	DESCRIPTION	MATERIAL	QTY.	REMARKS
501	CHANNEL ISMC150x75x1650Lg	IS:808	02	
502	CHANNEL ISMC150x75x1539Lg	IS:808	01	
503	CHANNEL ISMC150x75x2500Lg	IS:808	02	
504	HANDRAIL	COS TUBE	01	
505	HANDRAIL	COS TUBE	02	
506	HANDRAIL	COS TUBE	01	
507	I–BEAM ISMB 150x80x3015 lg	IS:808	03	
508	PLATE 10THKx75x150Lg	IS:2062 GRADE B	06	
509	PLATE 10THKx80x150Lg	IS:2062 GRADE B	03	
510	CHEQUERED PLATE 6THKx1500x2500Lg	IS:2062 GRADE B	01	
511	HEX.HD.SCR. M12x20Lg	IS:1364	24	
512	WASHER FOR M12	IS:2016	24	
513	PLATE 20THKx150x80Lg	IS:2062 GRADE B	01	

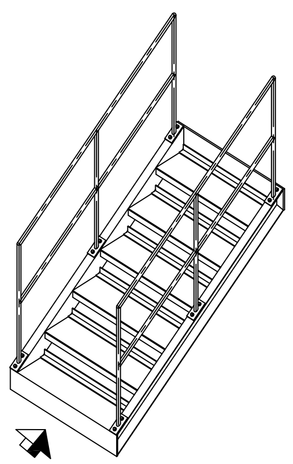

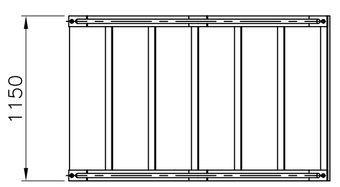

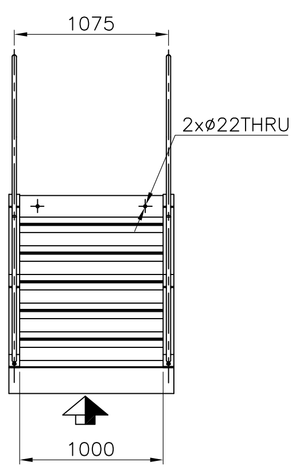

MIDDLE STAIR

REF TABLE No2

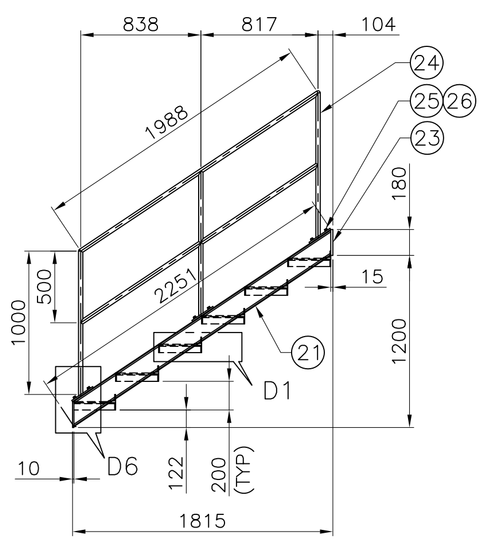

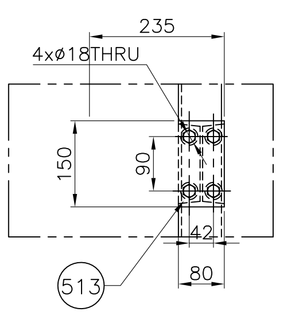

DETAIL D8

SCALE NTS.

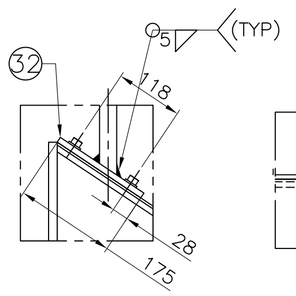

DETAIL D7

SCALE NTS.

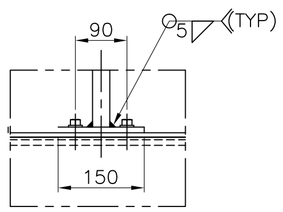

DETAIL D4

SCALE NTS.

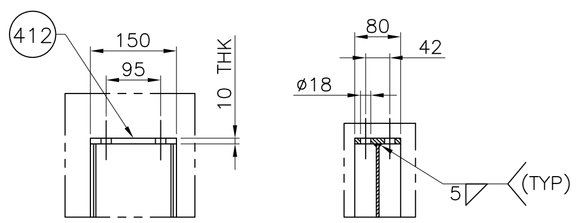

DETAIL D3

SCALE NTS.

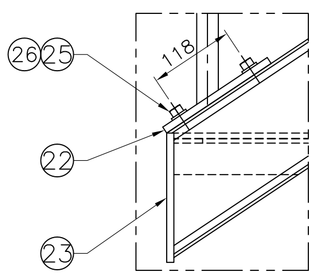

DETAIL D6

SCALE NTS.

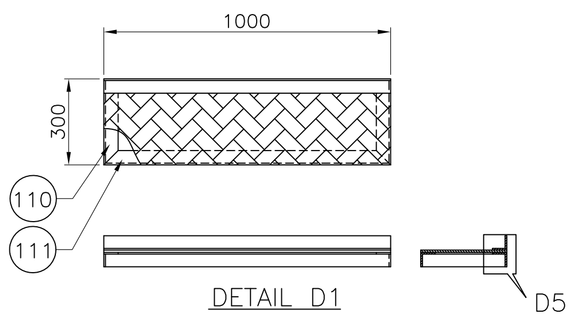

DETAIL D1

SCALE 1:12.5.

FOR DETAIL D2 REF

DETAIL 'D1' AS MIRROR IMAGE

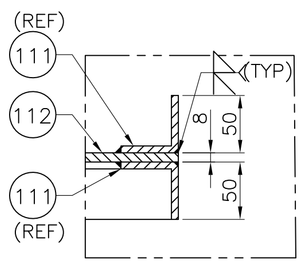

DETAIL D5

SCALE NTS.

DO NOT SCALE THE DRAWING
ASK IF IN DOUBT
UNLESS OTHERWISE SHOWN
ALL DIMENSIONS ARE IN MILLIMETERS
REMOVE SHARP EDGES & BURRS
CHAMFER 1 M.M. X 45°
MACHINING FINISH IN MICRONS :–
▽ 8 – 25 ▽▽ 1.6 – 8
▽▽▽ 0.025 – 1.6 ▽▽▽▽ < 0.025

DEVIATION FOR NON TOLERANCED DIMENSIONS (IS –2102)

DIAMETERS & LENGTHS	
UPTO & INCL. 6	+0.1
6 – 30	+0.2
30 – 120	+0.3
120 – 315	+0.5
315 – 1000	+0.8
1000 – 2000	+1.2
2000 – 4000	+2.0
4000 & ABOVE	+3.0

LENGTH IN M.M. OF SHORTER SIDE OF ANGLE UPTO & INCL.	
1– 6	± 1°–0'
6– 30	± 0°–30'
30–120	± 0°–20'
120–400	± 0°–10'

SPP

MATERIAL: REF BOM

FINISH: PAINTING

DRAWN: R.S

DRG.CHKD: C.P.K.

APPROVED: M.P.

TITLE: STAIRS COMPONENT

SATISH DHAWAN SPACE CENTRE

SOLID PROPELLANT PLANT

I.S.R.O SRIHARIKOTA

PROJECTION

SCALE: 1 : 30

DRG. NO.: 626-103-01-003-A1-R0

DATE: 05.08.11

SHEET OF

PART NO.	DESCRIPTION	MATERIAL	SPECIFICATION	QTY.
1	BEAM SUPPORT-1	–	PART-1	1
2	BEAM SUPPORT-2	–	PART-2	1
3	BEAM SUPPORT-3	–	PART-3	1
4	BEAM SUPPORT-4	–	PART-4	1
5	BEAM SUPPORT-5	–	PART-5	1
6	BEAM SUPPORT-6	–	PART-6	1
7	BEAM SUPPORT-7	–	PART-7	2
8	I-BEAM	IS:808	ISMB 200x75x10340Lg	4
9	I-BEAM	IS:808	ISMB 300x140x1390Lg	1
10	I-BEAM	IS:808	ISMB 300x140x1590Lg	1
11	I-BEAM	IS:808	ISMB 300x140x4190Lg	1
12	I-BEAM	IS:808	ISMB 300x140x910Lg	2
13	PLATE	IS:2062 Gr. B	30THKx190x350Lg	16
14	I-BEAM	IS:808	ISMB 300x140x2030Lg	6
15	PLATE	IS:2062 Gr. B	20THKx140x1036Lg	6
16	I-BEAM	IS:808	ISMB 300x140x3825Lg	6
18	I-BEAM	IS:808	ISMB 300x140x1687Lg	2
19	PLATE	IS:2062 Gr. B	10THKx140x165Lg	1
20	I-BEAM	IS:808	ISMB 300x140x910Lg	1
23	PLATE	IS:2062 Gr. B	20THKx613x140Lg	2
24	I-BEAM	IS:808	ISMB 300x140x1527Lg	2
25	ANGLE	IS:2062 Gr. B	ISA 50x50x5 THK L:1425	8
26	ANGLE	IS:2062 Gr. B	ISA 50x50x5 THK L:1170	6
29	PLATE	IS:2062 Gr. B	10THKx80x150Lg	1
31	PLATE	IS:2062 Gr. B	10THKx150x305Lg	1
33	ANGLE	IS:2062 Gr. B	ISA 50x50x5 THK L:1125	6

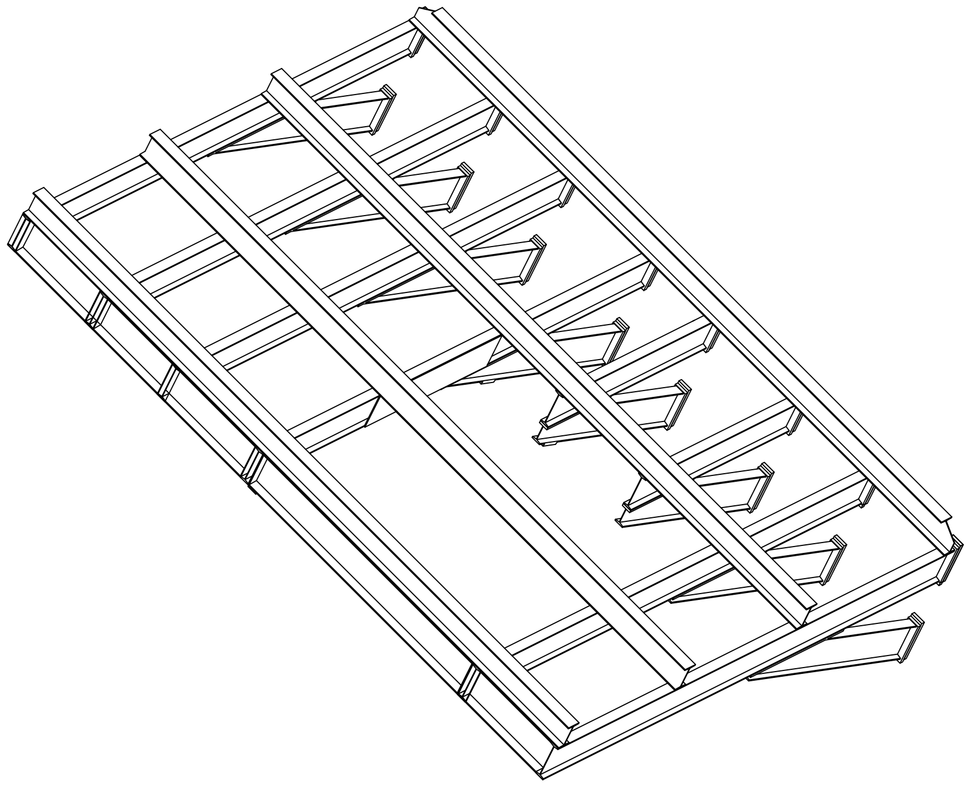

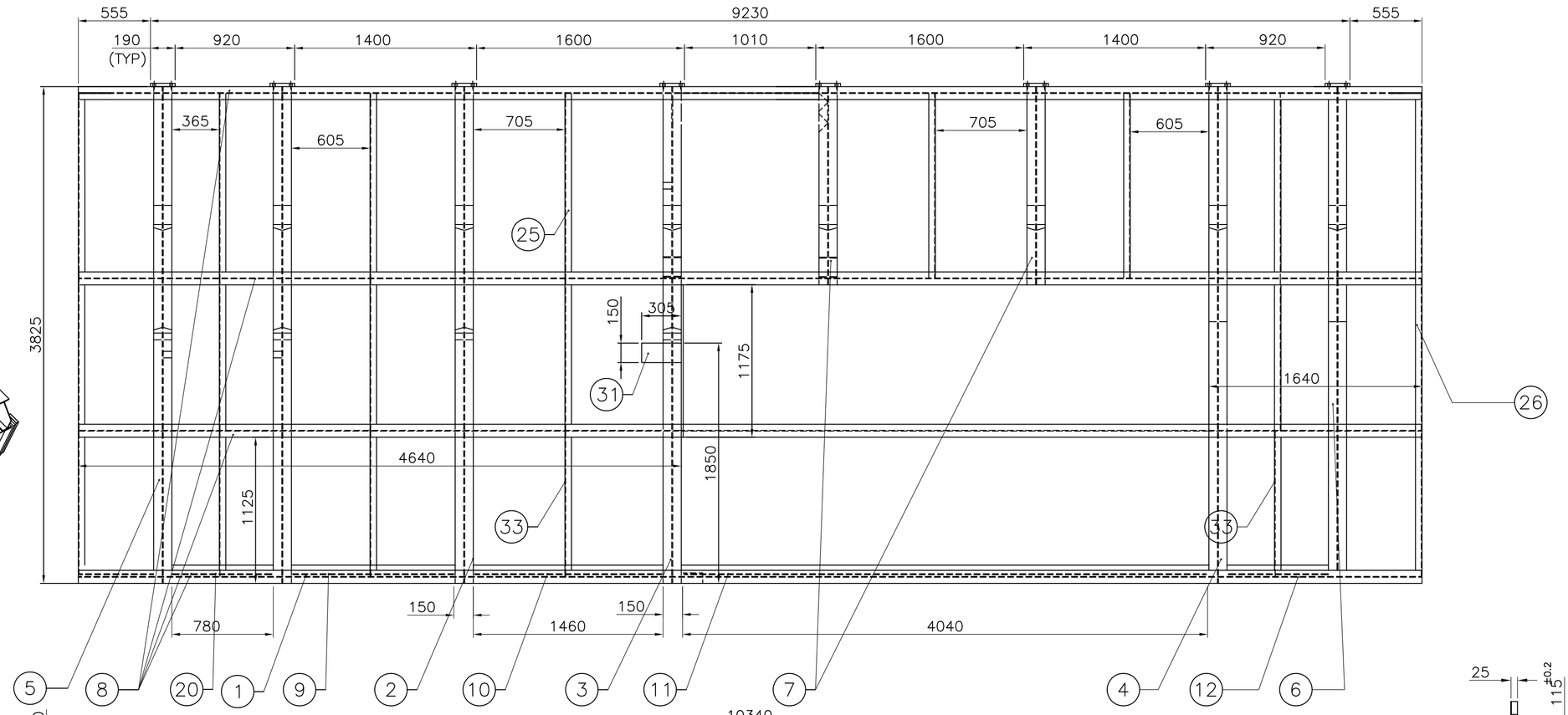

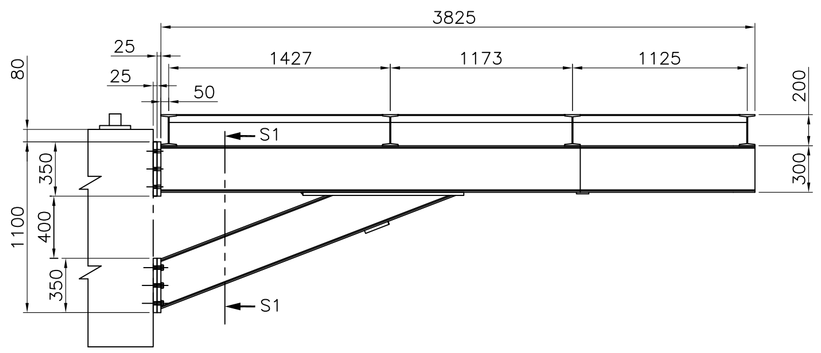

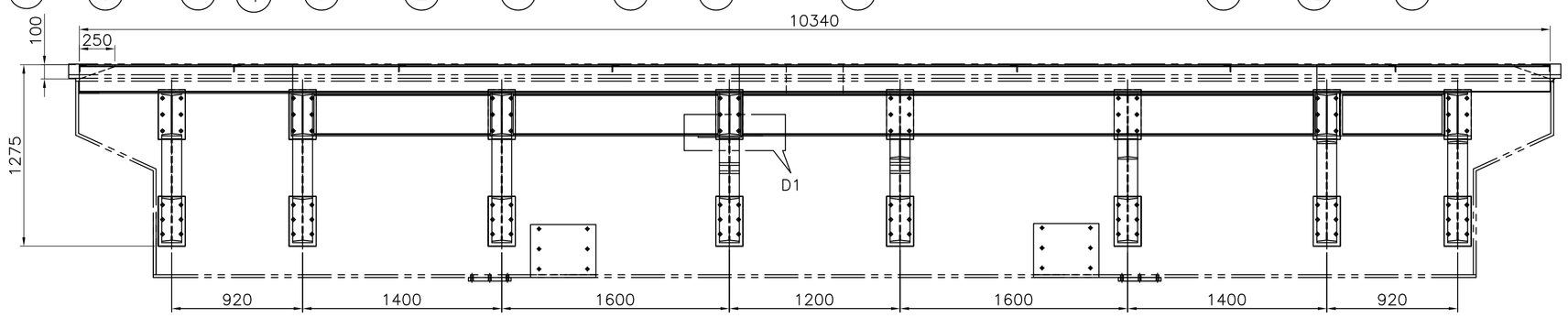

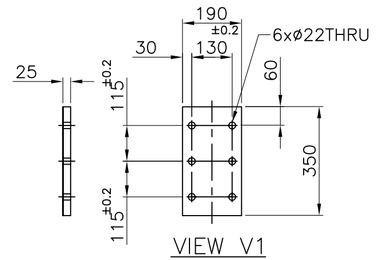

VIEW V1
SCALE 1:12.5
(QTY:8)

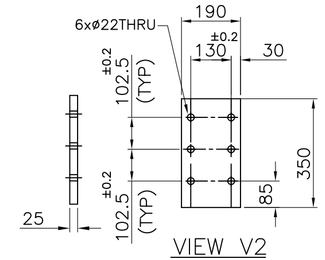

VIEW V2
SCALE 1:12.5
(QTY:8)

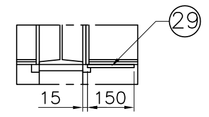

DETAIL D1

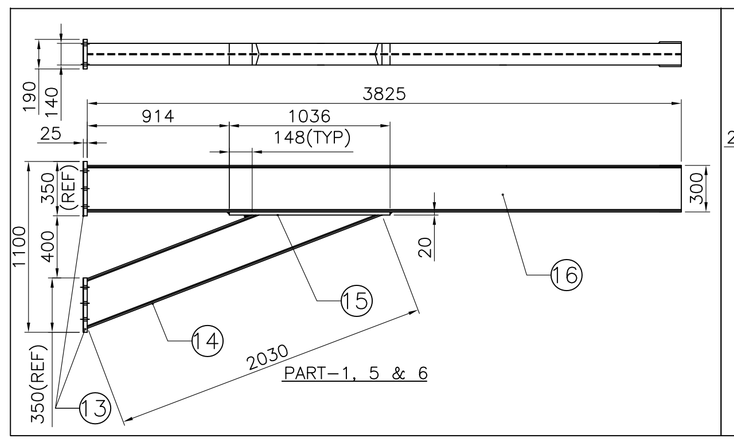

PART-1, 5 & 6

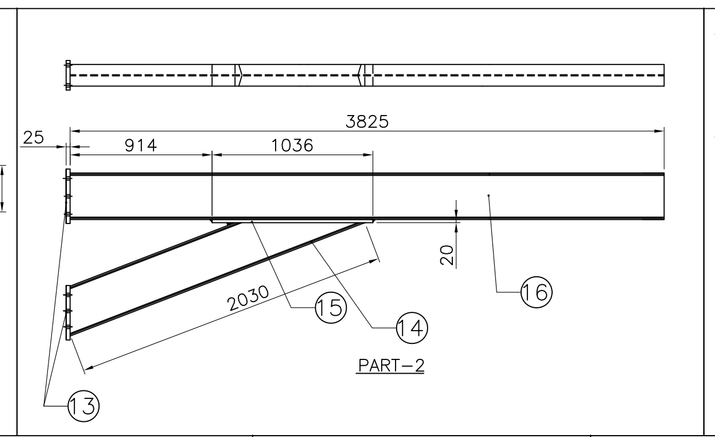

PART-2

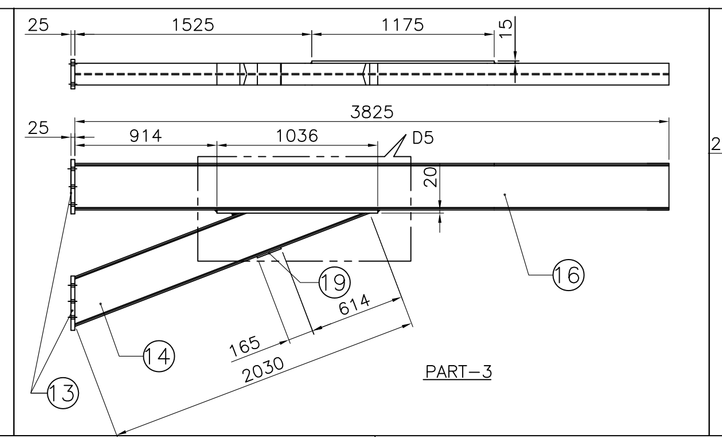

PART-3

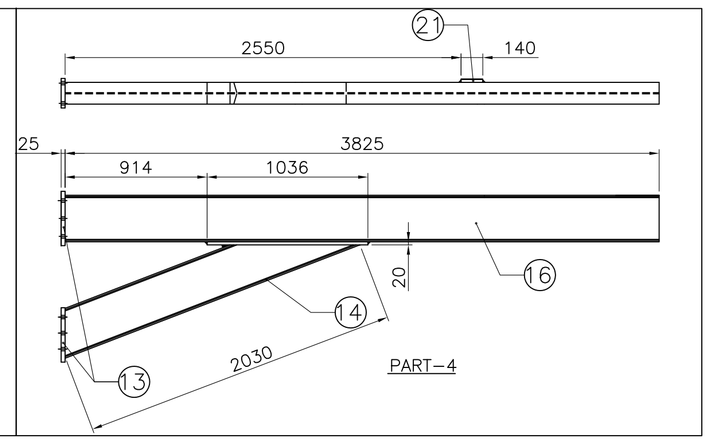

PART-4

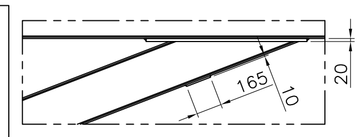

DETAIL D5
SCALE 1:10

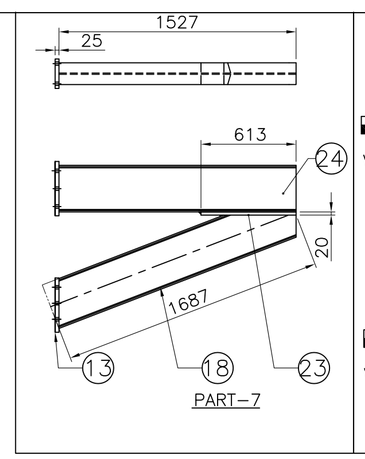

PART-7

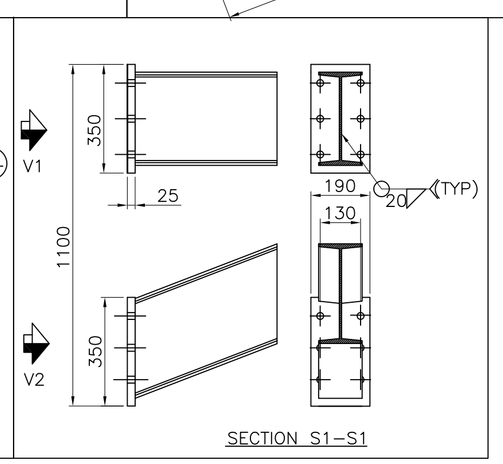

SECTION S1-S1

NOTES:

1. WEIGHT : 3130Kgs.
2. QTY/ASSY. : 01Nos.
3. REMOVE ALL SHARP CORNERS AND BURRS.
4. STRUCTURAL WELDS SHALL BE OF FULL PENETRATION WELDS.
5. THE BEAMS OF THE UPPER DECK EAST SHALL BE CAMBERED UPWARD BY ABOUT 20 MM FOR LEVELLING THE MOUNTING SURFACES FOR THE STAIRS. THE EXACT AMOUNT OF CAMBER SHALL BE DECIDED AT THE TIME OF FINAL ASSEMBLY

DO NOT SCALE THE DRAWING
ASK IF IN DOUBT
UNLESS OTHERWISE SHOWN
ALL DIMENSIONS ARE IN MILLIMETERS
REMOVE SHARP EDGES & BURRS
CHAMFER 1 M.M. X 45°
MACHINING FINISH IN MICRONS :-
▽ 8 – 25 ▽▽ 1.6 – 8
▽▽▽ 0.025 – 1.6 ▽▽▽▽ < 0.025

DEVIATION FOR NON TOLERANCED DIMENSIONS (IS –2102)

DIAMETERS & LENGTHS	
UPTO & INCL. 6	+0.1
6 – 30	+0.2
30 – 120	+0.3
120 – 315	+0.5
315 – 1000	+0.8
1000 – 2000	+1.2
2000 – 4000	+2.0
4000 & ABOVE	+3.0

LENGTH IN M.M. OF SHORTER SIDE OF ANGLE UPTO & INCL.	
1– 6	± 1°–0'
6– 30	± 0°–30'
30–120	± 0°–20'
120–400	± 0°–10'

SPP

TITLE: UPPER DECK WEST

MATERIAL: REF BOM
FINISH: PAINTING
DRAWN: R.S
DRG.CHKD: C.P.K.
APPROVED: M.P.

SATISH DHAWAN SPACE CENTRE
SOLID PROPELLANT PLANT
I.S.R.O SRIHARIKOTA

PROJECTION

SCALE	DRG. NO.	DATE	SHEET
1 : 27.5	626-103-01-002-A1-R0	05.08.11	OF

REF. DRG. NO.
COM. FILE NO.

REF. DRG. NO.
COM. FILE NO.

PART NO.	DESCRIPTION	MATERIAL	SPECIFICATION	QTY.	REMARKS
19	PLATE–1	IS:2062 Gr–B	75 x 5 x 1245	02	CUT TO SUIT
20	PLATE–2	IS:2062 Gr–B	75 x 5 x 6025	01	CUT TO SUIT
21	PLATE–3	IS:2062 Gr–B	75 x 5 x 6800	01	CUT TO SUIT
22	PLATE–4	IS:2062 Gr–B	75 x 5 x 6550	01	CUT TO SUIT
23	PLATE–5	IS:2062 Gr–B	75 x 5 x 8260	01	CUT TO SUIT
24	ANGLE	IS:2062 Gr–B	ISA 50x50x5 L:1000	32	CUT TO SUIT
25	I–BEAM	IS:808	ISMB 200x100x530Lg	04	CUT TO SUIT
26	ANGLE	IS:2062 Gr–B	ISA 50x50x5 L:880	08	CUT TO SUIT

PART NO.	DESCRIPTION	MATERIAL	SPECIFICATION	QTY.	REMARKS
1	I–BEAM	IS:808	ISMB 200x100x1525Lg	04	
2	I–BEAM	IS:808	ISMB 200x100x3250Lg	10	–
3	I–BEAM	IS:808	ISMB 200x100x10400Lg	02	–
4	CHEQUERED PLATE	IS:3502	1890 x 6THK x 5180Lg	01	CUT TO SUIT
5	CHEQUERED PLATE	IS:3502	1020 x 6THK x 1315Lg	01	CUT TO SUIT
6	CHEQUERED PLATE	IS:3502	1890 x 6THK x 5180Lg	01	CUT TO SUIT
7	CHEQUERED PLATE	IS:3502	2325 x 6THK x 4020Lg	01	CUT TO SUIT
8	CHEQUERED PLATE	IS:3502	2895 x 6THK x 4020Lg	01	CUT TO SUIT
9	CHEQUERED PLATE	IS:3502	2275 x 6THK x 5700Lg	01	CUT TO SUIT
10	CHEQUERED PLATE	IS:3502	1760 x 6THK x 5700Lg	01	CUT TO SUIT
14	CHEQUERED PLATE	IS:3502	1835 x 6THK x 3155Lg	04	CUT TO SUIT
15	CHEQUERED PLATE	IS:3502	3670 x 6THK x 4100Lg	01	CUT TO SUIT
16	I–BEAM	IS:808	ISMB 200x100x1470Lg	04	
17	C – SUPPORT	IS:1173	626–103–04–002–A2–R0	04	–
201	COUNTER SUNK SCREW	IS:6761–1972	M8x20L	TO SUIT	
202	HEX HEAD SCREW	IS:1363–1967	M10x30L	TO SUIT	
203	PLAIN WASHER	IS:5370–1969	M10	TO SUIT	

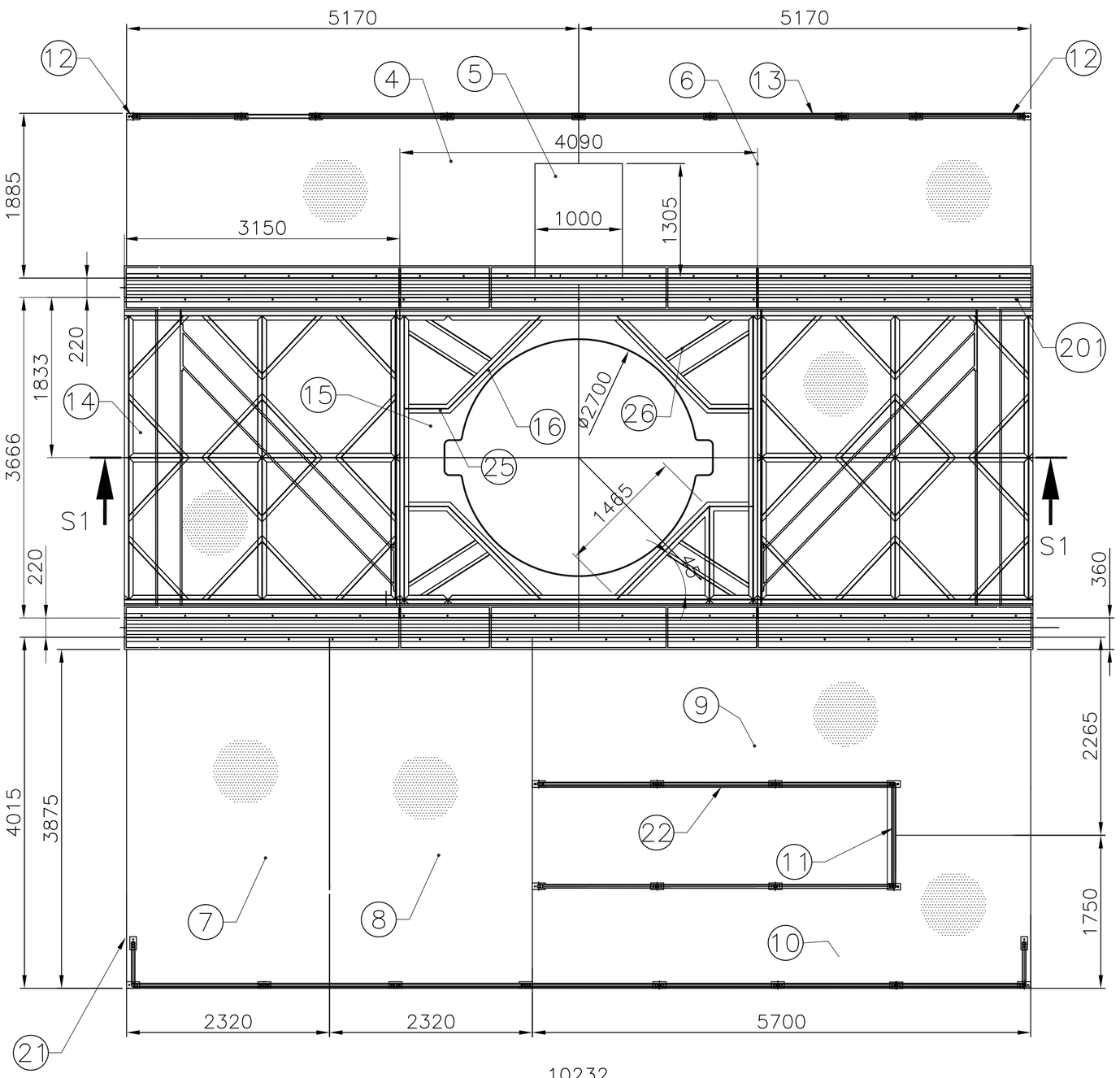

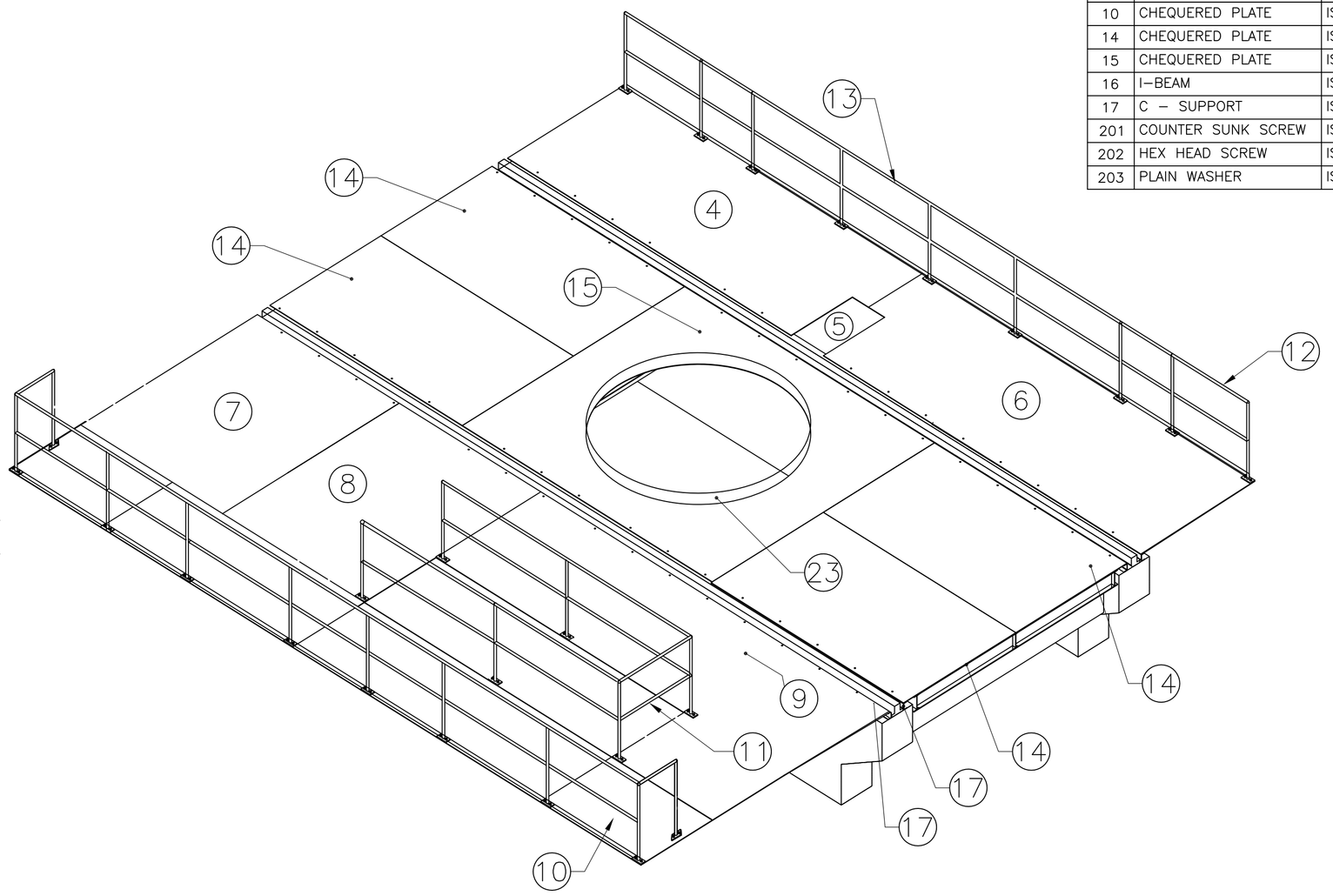

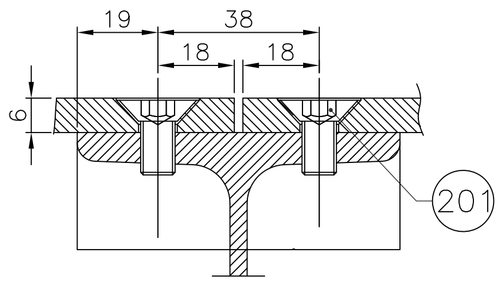

TYPICAL VIEW SHOWING FIXING OF PLAIN PLATES TO DECK PLATES RAILING
SCALE 1:1

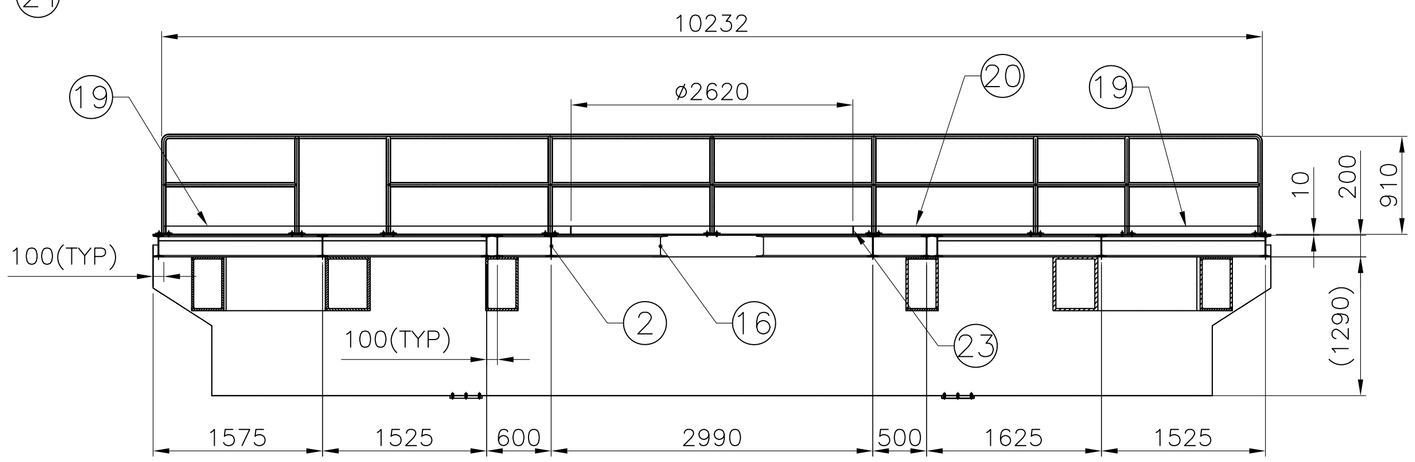

SECTION S1–S1

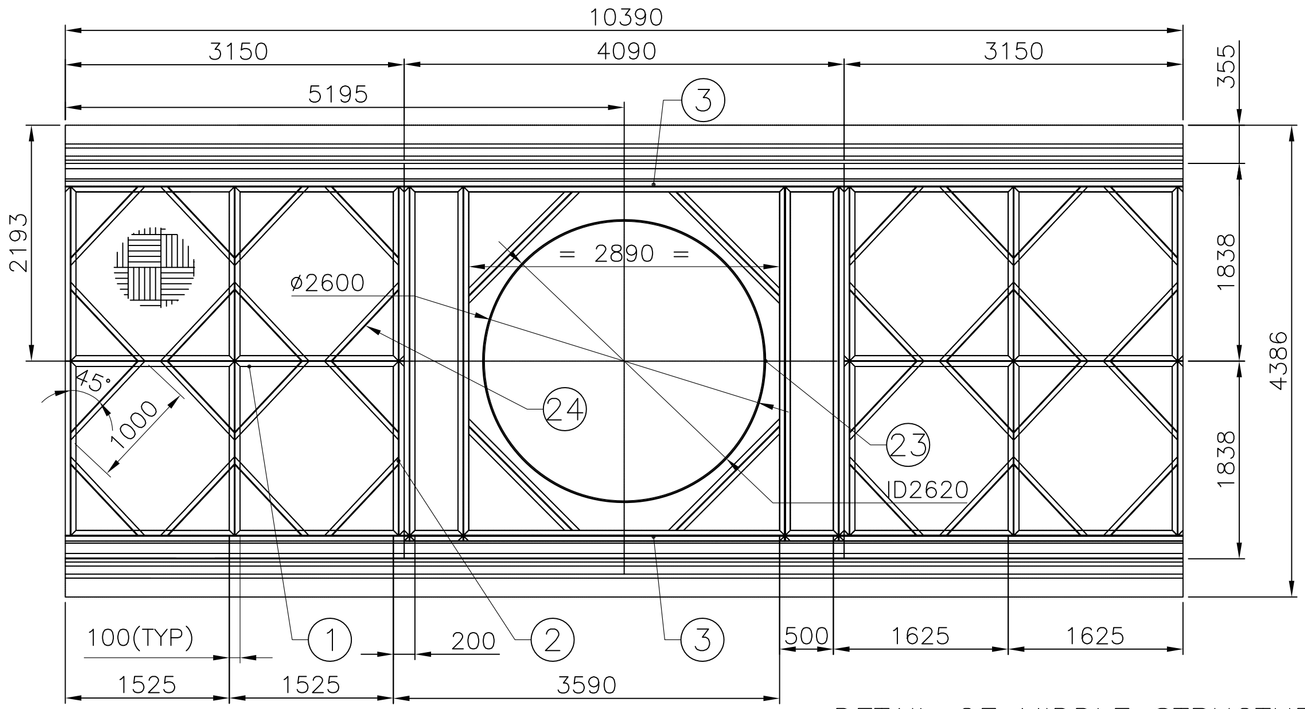

DETAIL OF MIDDLE STRUCTURE

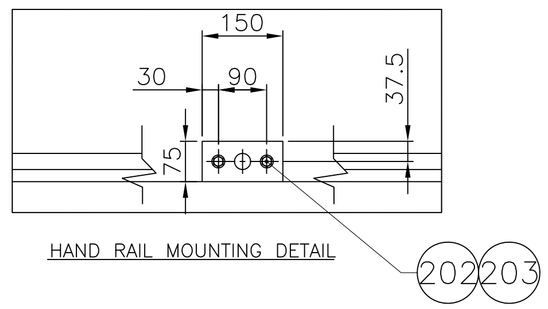

HAND RAIL MOUNTING DETAIL

NOTES:

1. WEIGHT : 5600Kgs.
2. QTY/ASSY. : 01Nos.
3. REMOVE ALL SHARP CORNERS AND BURRS.
4. STRUCTURAL WELDS SHALL BE OF FULL PENETRATION WELDS.
5. THE DECK PLATES MAY REQUIRE TRIMMING AT ASSEMBLY TO ACCOMMODATE OTHER ASSEMBLIES AND COMPONENTS.
6. COUNTERSUNK OR ROUND HEAD SCREWS ONLY SHALL BE USED TO FASTEN THE DECK PLATES TO AVOID INJURY TO USERS.

DO NOT SCALE THE DRAWING
ASK IF IN DOUBT
UNLESS OTHERWISE SHOWN
ALL DIMENSIONS ARE IN MILLIMETERS
REMOVE SHARP EDGES & BURRS
CHAMFER 1 M.M. X 45°
MACHINING FINISH IN MICRONS :–
▽ 8 – 25 ▽▽ 1.6 – 8
▽▽▽ 0.025 – 1.6 ▽▽▽▽ < 0.025

DEVIATION FOR NON TOLERANCED DIMENSIONS (IS –2102)

DIAMETERS & LENGTHS	
UPTO & INCL. 6	+0.1
6 – 30	+0.2
30 – 120	+0.3
120 – 315	+0.5
315 – 1000	+0.8
1000 – 2000	+1.2
2000 – 4000	+2.0
4000 & ABOVE	+3.0

LENGTH IN M.M. OF SHORTER SIDE OF ANGLE UPTO & INCL.	
1– 6	± 1°–00'
6– 30	± 0°–30'
30–120	± 0°–20'
120–400	± 0°–10'

SPP

MATERIAL:	REF BOM
FINISH:	PAINTING
DRAWN	R.S
DRG.CHKD	C.P.K
APPROVED	M.P

TITLE
UPPER DECK PLATES
& UPPER DECK MIDDLE

SATISH DHAWAN SPACE CENTRE
SOLID PROPELLANT PLANT
I.S.R.O SRIHARIKOTA

PROJECTION

SCALE	DRG. NO.	DATE	SHEET
1 : 50	626-103-03-001-A2-R0	05.08.11	OF

REF. DRG. NO.
COM. FILE NO.

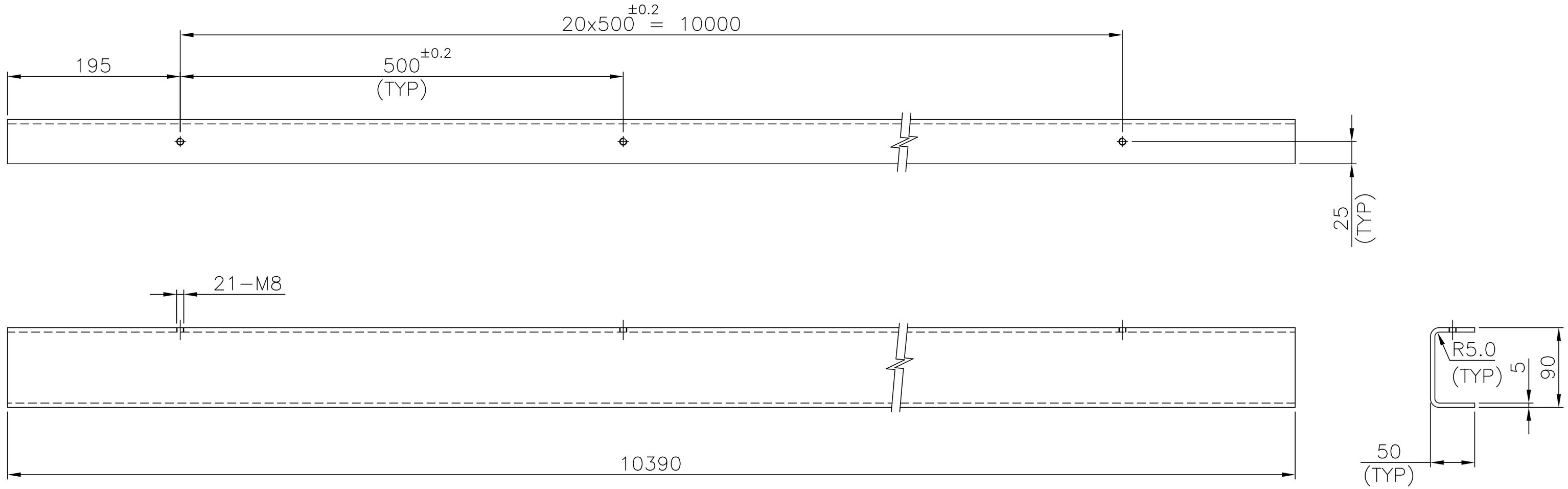

NOTES:

1. REMOVE ALL SHARP CORNERS AND BURRS.

DO NOT SCALE THE DRAWING
ASK IF IN DOUBT
UNLESS OTHERWISE SHOWN
ALL DIMENSIONS ARE IN MILLIMETERS
REMOVE SHARP EDGES & BURRS
CHAMFER 1 M.M. X 45°
MACHINING FINISH IN MICRONS :–
▽ 8 – 25 ▽▽ 1.6 – 8
▽▽▽ 0.025 – 1.6 ▽▽▽▽ < 0.025

DEVIATION FOR NON TOLERANCED DIMENSIONS (IS –2102)

DIAMETERS & LENGTHS	
UPTO & INCL. 6	+0.1
6 – 30	+0.2
30 – 120	+0.3
120 – 315	+0.5
315 – 1000	+0.8
1000 – 2000	+1.2
2000 – 4000	+2.0
4000 & ABOVE	+3.0

LENGTH IN M.M. OF SHORTER SIDE OF ANGLE UPTO & INCL.	
1– 6	± 1°–00'
6– 30	± 0°–30'
30–120	± 0°–20'
120–400	± 0°–10'

SPP

MATERIAL:	SHEET IS: 2062 180 x 5 THK, L-10395
FINISH:	PAINTING
DRAWN	R.S
DRG.CHKD	C.P.K
APPROVED	M.P

TITLE: C-SUPPORT

SATISH DHAWAN SPACE CENTRE
SOLID PROPELLANT PLANT
I.S.R.O SRIHARIKOTA

PROJECTION

SCALE	DRG. NO.	DATE	SHEET
1 : 5	626-103-04-002-A2-R0	05.08.11	OF

PART NO.	DESCRIPTION	MATERIAL	SPECIFICATION	QTY.
1	LOWER DECK SUPPORT LEG	REF DWG.	626-104-00-002-A4-R0	12
6	STRUCTURE FRAME-A	REF DWG.	626-104-00-007-A3-R0	01
7	STRUCTURE FRAME-B	REF DWG.	626-104-00-008-A3-R0	01
8	STRUCTURE FRAME-C	REF DWG.	626-104-00-009-A3-R0	01
9	STRUCTURE FRAME-D	REF DWG.	626-104-00-010-A3-R0	01
10	CHEQUER PLATE OUTER	REF DWG.	626-104-00-011-A3-R0	01
11	COVER PLATE-A	REF DWG.	626-104-00-012-A3-R0	08
12	COVER PLATE-B	REF DWG.	626-104-00-013-A3-R0	08
13	CHEQUER PLATE INNER	REF DWG.	626-104-00-014-A3-R0	01
14	PIN	REF DWG.	626-104-00-015-A4-R0	32
15	LOWER DECK SUPPORT LEG	REF DWG.	626-104-00-016-A4-R0	08
16	SPILT PIN	STD	ø2 x 14	32

REF. DRG. NO.

COM. FILE NO.

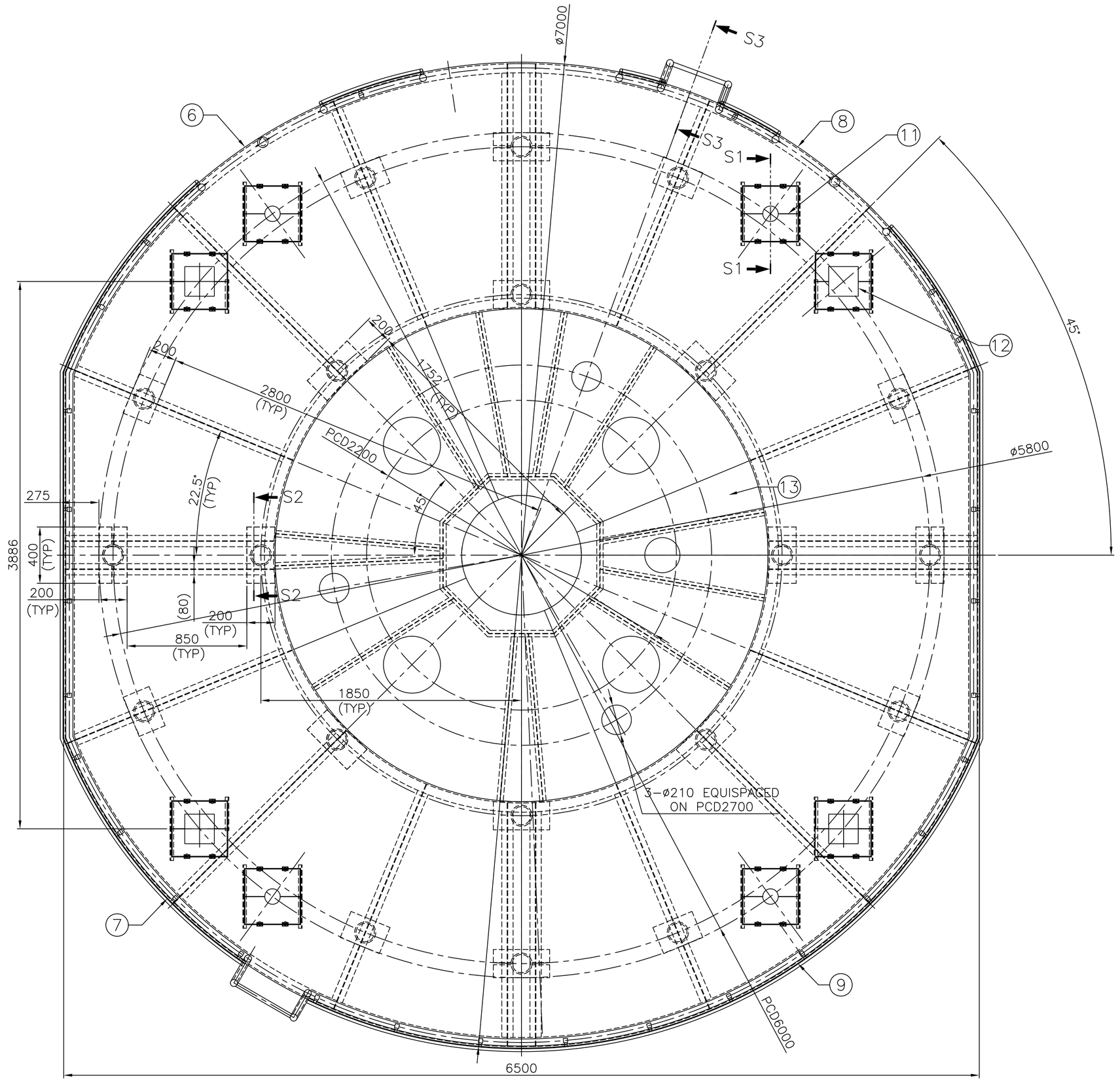

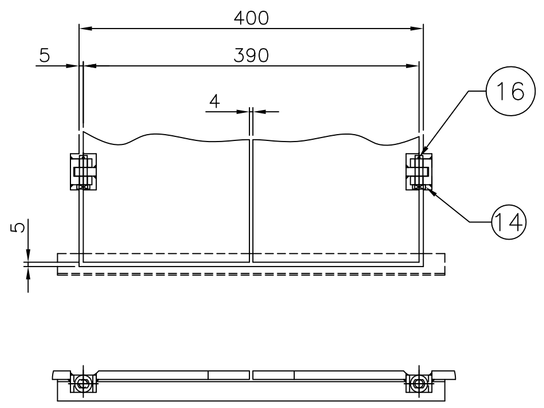

SECTION S1-S1

SCALE 1:5

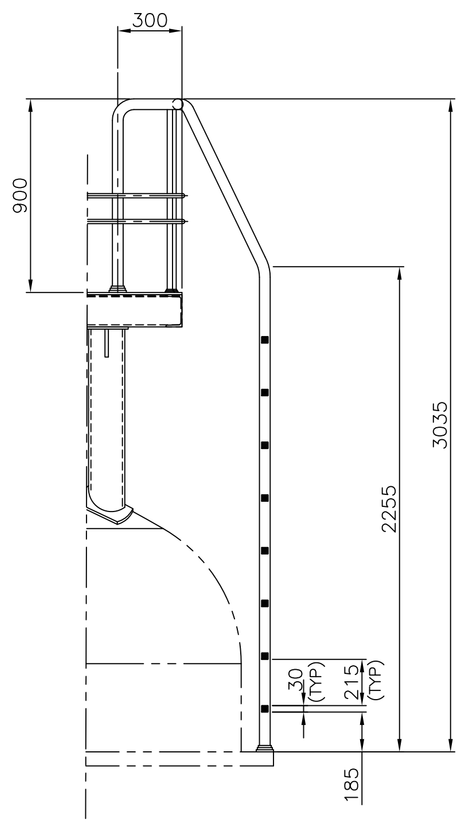

SECTION S3-S3

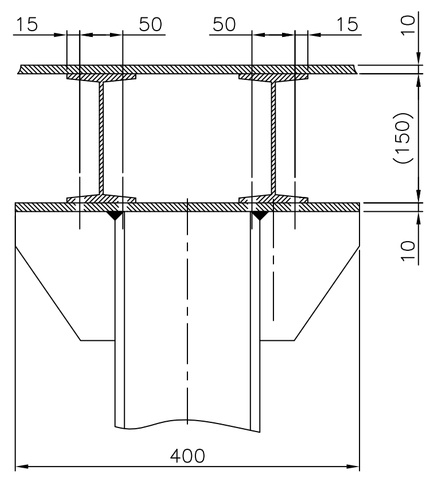

SECTION S2-S2

SCALE 1:5

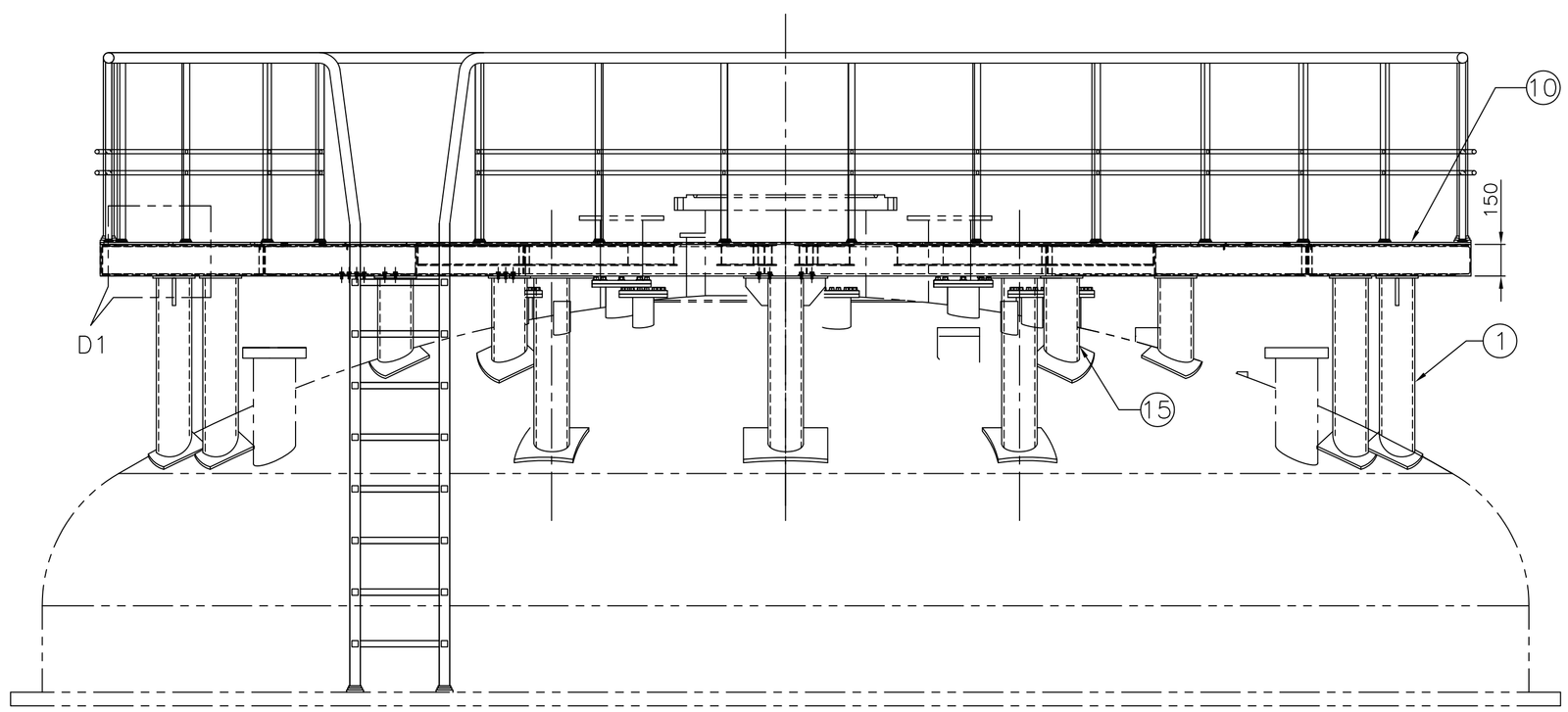

DO NOT SCALE THE DRAWING
ASK IF IN DOUBT
UNLESS OTHERWISE SHOWN
ALL DIMENSIONS ARE IN MILLIMETERS
REMOVE SHARP EDGES & BURRS
CHAMFER 1 M.M. X 45°
MACHINING FINISH IN MICRONS :-
▽ 8 – 25 ▽▽ 1.6 – 8
▽▽▽ 0.025 – 1.6 ▽▽▽▽ < 0.025

DEVIATION FOR NON TOLERANCED DIMENSIONS (IS -2102)

DIAMETERS & LENGTHS	
UPTO & INCL. 6	+0.1
6 – 30	+0.2
30 – 120	+0.3
120 – 315	+0.5
315 – 1000	+0.8
1000 – 2000	+1.2
2000 – 4000	+2.0
4000 & ABOVE	+3.0

LENGTH IN M.M. OF SHORTER SIDE OF ANGLE UPTO & INCL.	
1– 6	± 1°–00'
6– 30	± 0°–30'
30–120	± 0°–20'
120–400	± 0°–10'

SPP

TITLE: LOWER DECK ASSEMBLY

MATERIAL: REF. BOM

FINISH: PAINTING

DRAWN: R.S

DRG.CHKD: C.P.K.

APPROVED: M.P.

SATISH DHAWAN SPACE CENTRE
SOLID PROPELLANT PLANT
I.S.R.O SRIHARIKOTA

PROJECTION

SCALE: 1 : 20

DRG. NO.: 626-104-00-001-A1-R0

DATE: 05.08.11

SHEET OF

PART NO.	DESCRIPTION	MATERIAL	SPECIFICATION	QTY.
1	DISC	IS:2062 Gr B	ø205 x 10THK	01
2	PIPE	IS:2062 Gr B	PIPE 6"(SCH 80)OD:168.3 WT:10.97 L:995	01

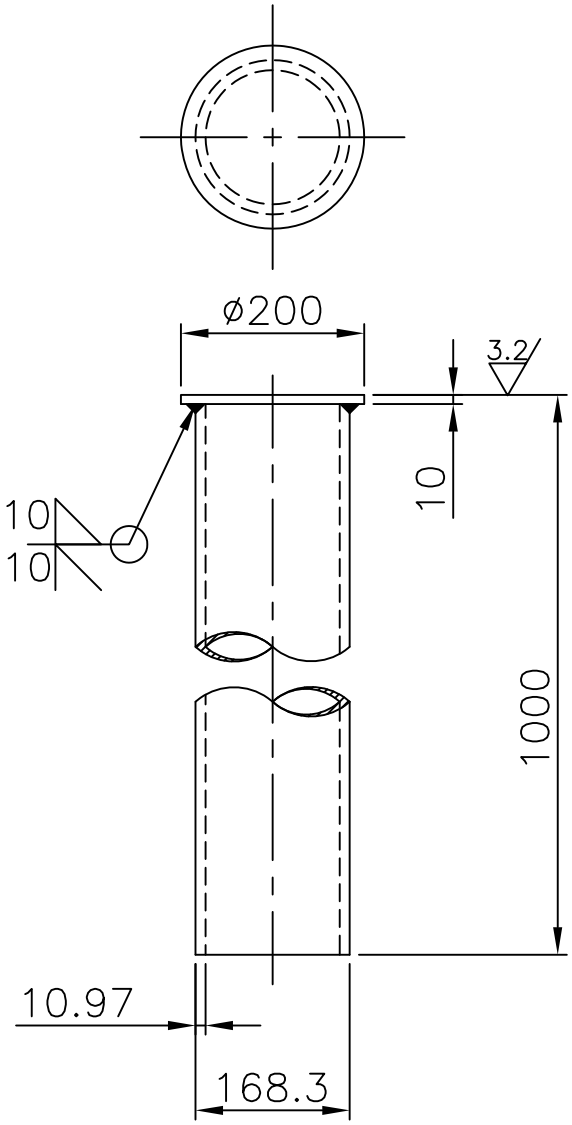

NOTES:

1. REMOVE ALL SHARP CORNERS AND BURRS.
2. TO BE A WELDED CONSTRUCTION.

DO NOT SCALE THE DRAWING
ASK IF IN DOUBT
UNLESS OTHERWISE SHOWN
ALL DIMENSIONS ARE IN MILLIMETERS
REMOVE SHARP EDGES & BURRS
CHAMFER 1 M.M. X 45°
MACHINING FINISH IN MICRONS :-
▽ 8 – 25 ▽▽ 1.6 – 8
▽▽▽ 0.025 – 1.6 ▽▽▽▽ < 0.025

DEVIATION FOR NON TOLERANCED DIMENSIONS (IS –2102)

DIAMETERS & LENGTHS	
UPTO & INCL. 6	+0.1
6 – 30	+0.2
30 – 120	+0.3
120 – 315	+0.5
315 – 1000	+0.8
1000 – 2000	+1.2
2000 – 4000	+2.0
4000 & ABOVE	+3.0

LENGTH IN M.M. OF SHORTER SIDE OF ANGLE UPTO & INCL.	
1– 6	± 1°–0'
6– 30	± 0°–30'
30–120	± 0°–20'
120–400	± 0°–10'

SPP

TITLE: LOWER DECK SUPPORT LEG

MATERIAL: REF. BOM
FINISH: PAINTING
DRAWN: R.S
DRG.CHKD: C.P.K.
APPROVED: M.P.

SATISH DHAWAN SPACE CENTRE
SOLID PROPELLANT PLANT
I.S.R.O SRIHARIKOTA

PROJECTION

SCALE	DRG. NO.	DATE	SHEET
1 : 8	626-104-00-002-A4-R0	05.08.11	OF

REF. DRG. NO.
COM. FILE NO.

PART NO.	DESCRIPTION	MATERIAL	SPECIFICATION	QTY.
1	CHANNEL	IS:808	ISMC–150x4175Lg	01
2	CHANNEL	IS:808	ISMC–150x2910Lg	01
3	CHANNEL	IS:808	ISMC–150x1300Lg	01
4	I–BEAM	IS:808	ISMB–150x1480Lg	01
5	I–BEAM	IS:808	ISMB–150x1740Lg	04
6	I–BEAM	IS:808	ISMB–100x1325Lg	03

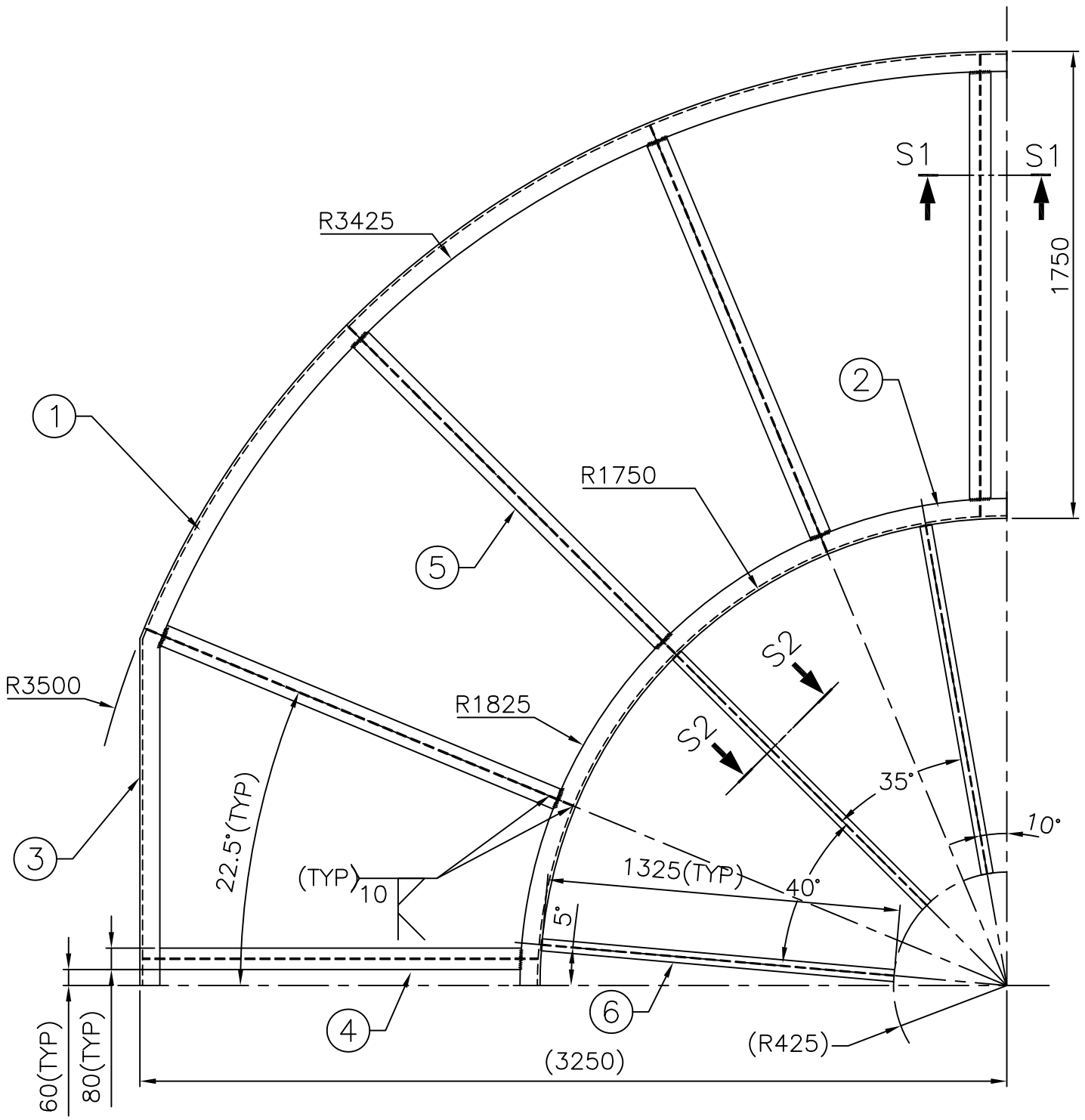

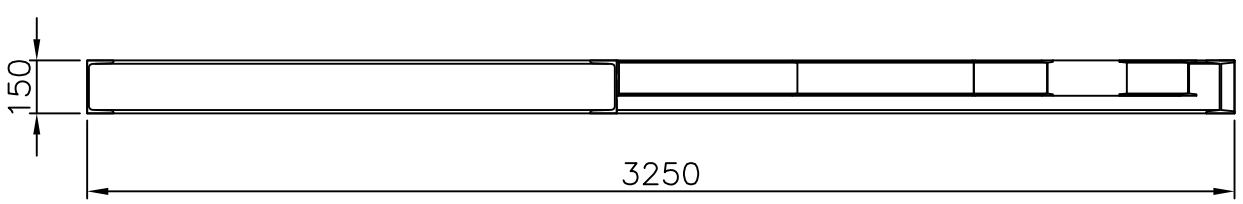

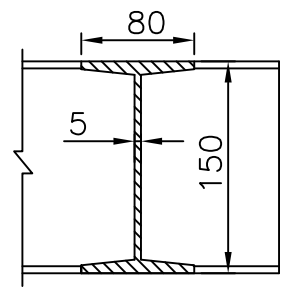

SECTION S1–S1

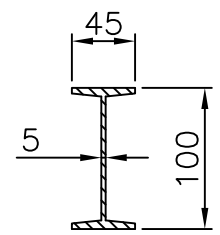

SECTION S2–S2

NOTES:

1. MATERIAL : REF. BOM
2. REMOVE ALL SHARP CORNERS AND BURRS.
3. STRUCTURAL WELDS SHALL BE OF FULL PENETRATION WELDS..
4. REFER. TENDER DOCUMENT FOR ALL WELDING SPECIFICATIONS.
5. PAINTING SHALL BE DONE AS PER THE SPEC. GIVEN IN TENDER DOCUMENT.

DO NOT SCALE THE DRAWING
ASK IF IN DOUBT
UNLESS OTHERWISE SHOWN
ALL DIMENSIONS ARE IN MILLIMETERS
REMOVE SHARP EDGES & BURRS
CHAMFER 1 M.M. X 45°
MACHINING FINISH IN MICRONS :–
▽ 8 – 25 ▽▽ 1.6 – 8
▽▽▽ 0.025 – 1.6 ▽▽▽▽ < 0.025

DEVIATION FOR NON TOLERANCED DIMENSIONS (IS –2102)

DIAMETERS & LENGTHS	
UPTO & INCL. 6	+0.1
6 – 30	+0.2
30 – 120	+0.3
120 – 315	+0.5
315 – 1000	+0.8
1000 – 2000	+1.2
2000 – 4000	+2.0
4000 & ABOVE	+3.0

LENGTH IN M.M. OF SHORTER SIDE OF ANGLE UPTO & INCL.	
1– 6	± 1°–0'
6– 30	± 0°–30'
30–120	± 0°–20'
120–400	± 0°–10'

SPP

MATERIAL:	REF BOM
FINISH:	PAINTING
DRAWN	R.S
DRG.CHKD	C.P.K.
APPROVED	M.P.

TITLE: STRUCTURE FRAME - A
LOWER DECK

SATISH DHAWAN SPACE CENTRE
SOLID PROPELLANT PLANT
I.S.R.O SRIHARIKOTA

PROJECTION

SCALE	DRG. NO.	DATE	SHEET
1 : 20	626-104-00-007-A3-R0	05.08.11	OF

REF. DRG. NO.
COM. FILE NO.

PART NO.	DESCRIPTION	MATERIAL	SPECIFICATION	QTY.
1	CHANNEL	IS:808	ISMC–150x4175Lg	01
2	CHANNEL	IS:808	ISMC–150x2910Lg	01
3	CHANNEL	IS:808	ISMC–150x1300Lg	01
4	I–BEAM	IS:808	ISMB–150x1480Lg	01
5	I–BEAM	IS:808	ISMB–150x1740Lg	04
6	I–BEAM	IS:808	ISMB–100x1325Lg	03

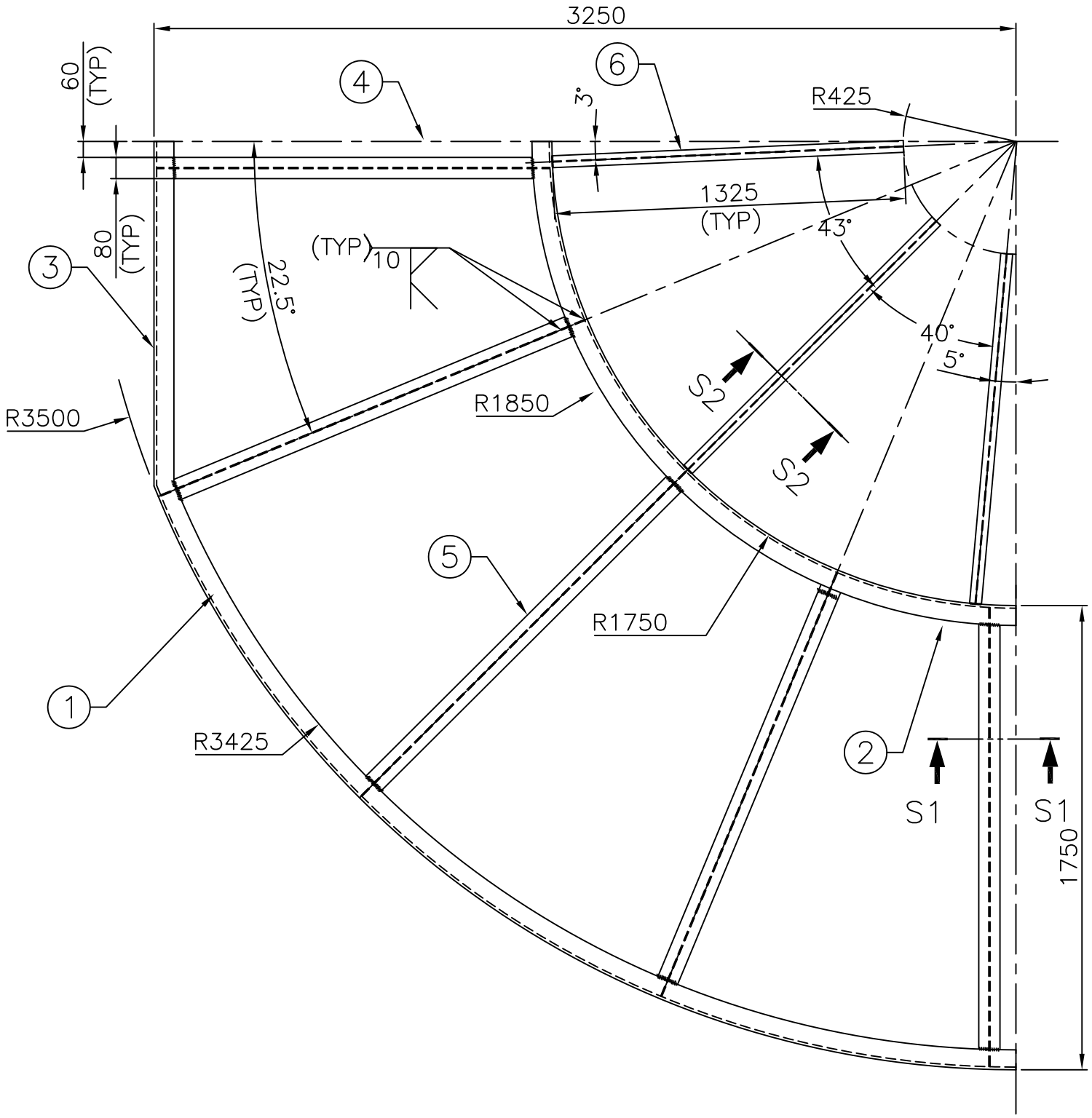

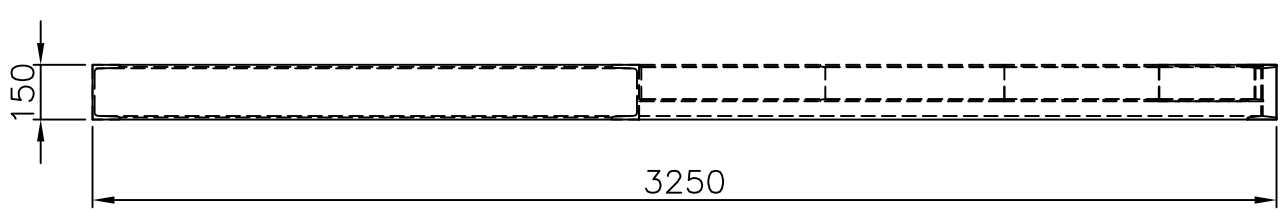

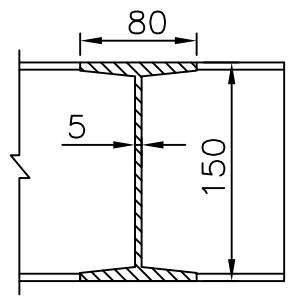

SECTION S1–S1

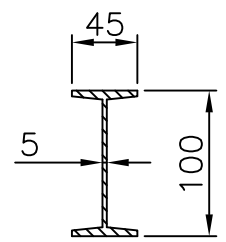

SECTION S2–S2

NOTES:

1. MATERIAL : REF. BOM
2. REMOVE ALL SHARP CORNERS AND BURRS.
3. STRUCTURAL WELDS SHALL BE OF FULL PENETRATION WELDS..
4. REFER. TENDER DOCUMENT FOR ALL WELDING SPECIFICATIONS.
5. PAINTING SHALL BE DONE AS PER THE SPEC.GIVEN IN TENDER DOCUMENT.

DO NOT SCALE THE DRAWING
ASK IF IN DOUBT
UNLESS OTHERWISE SHOWN
ALL DIMENSIONS ARE IN MILLIMETERS
REMOVE SHARP EDGES & BURRS
CHAMFER 1 M.M. X 45°
MACHINING FINISH IN MICRONS :–
▽ 8 – 25 ▽▽ 1.6 – 8
▽▽▽ 0.025 – 1.6 ▽▽▽▽ < 0.025

DEVIATION FOR NON TOLERANCED DIMENSIONS (IS –2102)

DIAMETERS & LENGTHS	
UPTO & INCL. 6	+0.1
6 – 30	+0.2
30 – 120	+0.3
120 – 315	+0.5
315 – 1000	+0.8
1000 – 2000	+1.2
2000 – 4000	+2.0
4000 & ABOVE	+3.0

LENGTH IN M.M. OF SHORTER SIDE OF ANGLE UPTO & INCL.	
1– 6	± 1°–0'
6– 30	± 0°–30'
30–120	± 0°–20'
120–400	± 0°–10'

SPP

MATERIAL:	REF BOM
FINISH:	PAINTING
DRAWN	R.S
DRG.CHKD	C.P.K.
APPROVED	M.P.

TITLE STRUCTURE FRAME - B
LOWER DECK

SATISH DHAWAN SPACE CENTRE
SOLID PROPELLANT PLANT
I.S.R.O SRIHARIKOTA

PROJECTION

SCALE	DRG. NO.	DATE	SHEET
1 : 20	626-104-00-008-A3-R0	05.08.11	OF

REF. DRG. NO.
COM. FILE NO.

PART NO.	DESCRIPTION	MATERIAL	SPECIFICATION	QTY.
1	CHANNEL	IS:808	ISMC–150x4175Lg	01
2	CHANNEL	IS:808	ISMC–150x2910Lg	01
3	CHANNEL	IS:808	ISMC–150x1300Lg	01
4	I–BEAM	IS:808	ISMB–150x1485Lg	01
5	I–BEAM	IS:808	ISMB–150x1740Lg	04
6	I–BEAM	IS:808	ISMB–100x1325Lg	03

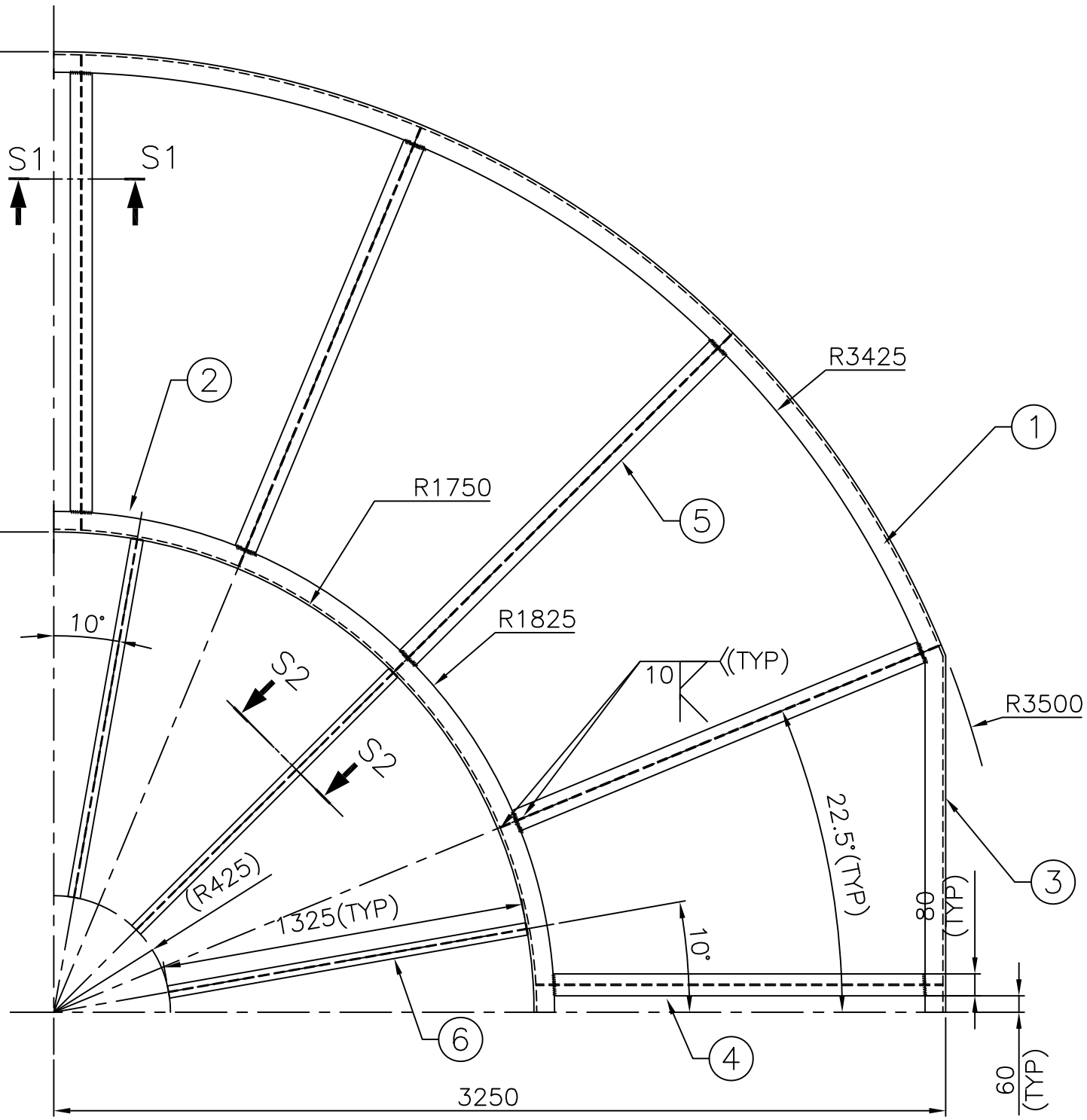

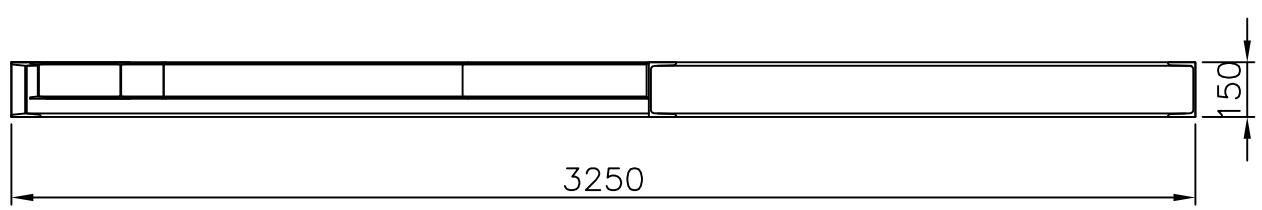

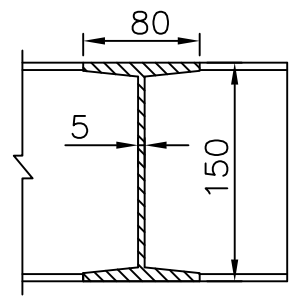

SECTION S1–S1

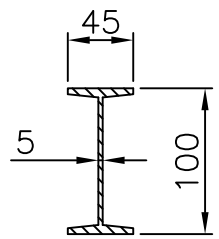

SECTION S2–S2

NOTES:

1. MATERIAL : REF. BOM
2. REMOVE ALL SHARP CORNERS AND BURRS.
3. STRUCTURAL WELDS SHALL BE OF FULL PENETRATION WELDS..
4. REFER. TENDER DOCUMENT FOR ALL WELDING SPECIFICATIONS.
5. PAINTING SHALL BE DONE AS PER THE SPEC. GIVEN IN TENDER DOCUMENT

DO NOT SCALE THE DRAWING
ASK IF IN DOUBT
UNLESS OTHERWISE SHOWN
ALL DIMENSIONS ARE IN MILLIMETERS
REMOVE SHARP EDGES & BURRS
CHAMFER 1 M.M. X 45°
MACHINING FINISH IN MICRONS :–
▽ 8 – 25 ▽▽ 1.6 – 8
▽▽▽ 0.025 – 1.6 ▽▽▽▽ < 0.025

DEVIATION FOR NON TOLERANCED DIMENSIONS (IS –2102)

DIAMETERS & LENGTHS	
UPTO & INCL. 6	+0.1
6 – 30	+0.2
30 – 120	+0.3
120 – 315	+0.5
315 – 1000	+0.8
1000 – 2000	+1.2
2000 – 4000	+2.0
4000 & ABOVE	+3.0

LENGTH IN M.M. OF SHORTER SIDE OF ANGLE UPTO & INCL.	
1– 6	± 1°–00'
6– 30	± 0°–30'
30–120	± 0°–20'
120–400	± 0°–10'

SPP

MATERIAL:	REF BOM
FINISH:	PAINTING
DRAWN	R.S
DRG.CHKD	C.P.K.
APPROVED	M.P.

TITLE: STRUCTURE FRAME - C
LOWER DECK

SATISH DHAWAN SPACE CENTRE
SOLID PROPELLANT PLANT
I.S.R.O SRIHARIKOTA

PROJECTION

SCALE	DRG. NO.	DATE	SHEET
1 : 20	626-104-00-009-A3-R0	05.08.11	OF

REF. DRG. NO.
COM. FILE NO.

PART NO.	DESCRIPTION	MATERIAL	SPECIFICATION	QTY.
1	CHANNEL	IS:808	ISMC–150x4175Lg	01
2	CHANNEL	IS:808	ISMC–150x2910Lg	01
3	CHANNEL	IS:808	ISMC–150x1300Lg	01
4	I–BEAM	IS:808	ISMB–150x1480Lg	01
5	I–BEAM	IS:808	ISMB–150x1730Lg	04
6	I–BEAM	IS:808	ISMB–100x1325Lg	03

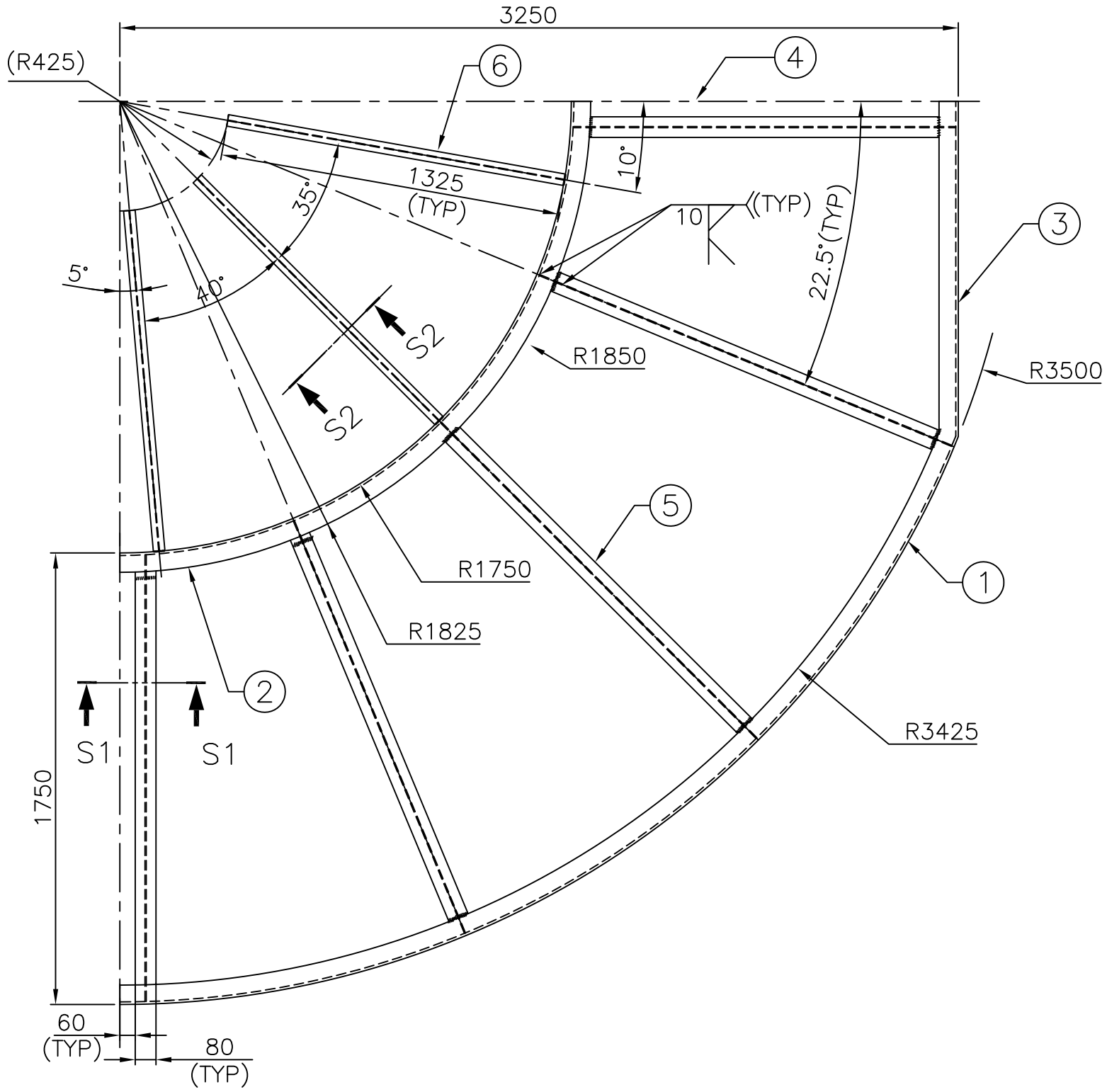

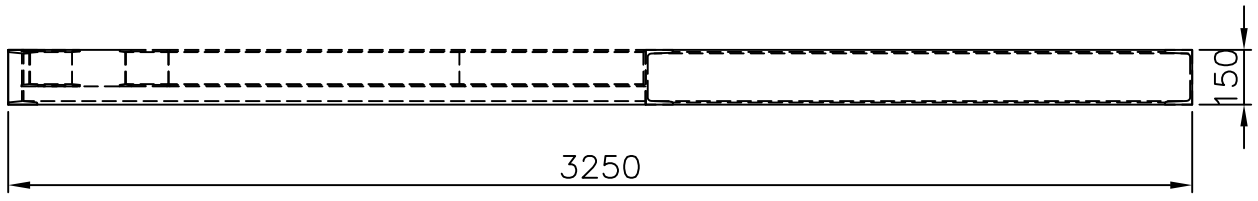

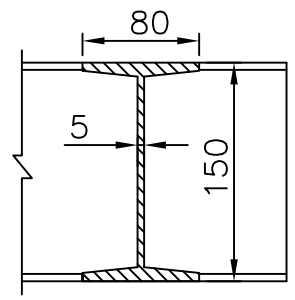

SECTION S1–S1

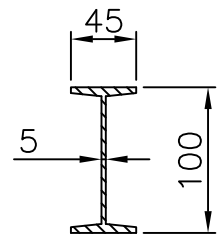

SECTION S2–S2

NOTES:

1. MATERIAL : REF. BOM
2. REMOVE ALL SHARP CORNERS AND BURRS.
3. STRUCTURAL WELDS SHALL BE OF FULL PENETRATION WELDS..

DO NOT SCALE THE DRAWING
ASK IF IN DOUBT
UNLESS OTHERWISE SHOWN
ALL DIMENSIONS ARE IN MILLIMETERS
REMOVE SHARP EDGES & BURRS
CHAMFER 1 M.M. X 45°
MACHINING FINISH IN MICRONS :–
▽ 8 – 25 ▽▽ 1.6 – 8
▽▽▽ 0.025 – 1.6 ▽▽▽▽ < 0.025

DEVIATION FOR NON TOLERANCED DIMENSIONS (IS –2102)

DIAMETERS & LENGTHS	
UPTO & INCL. 6	+0.1
6 – 30	+0.2
30 – 120	+0.3
120 – 315	+0.5
315 – 1000	+0.8
1000 – 2000	+1.2
2000 – 4000	+2.0
4000 & ABOVE	+3.0

LENGTH IN M.M. OF SHORTER SIDE OF ANGLE UPTO & INCL.	
1– 6	± 1°–0'
6– 30	± 0°–30'
30–120	± 0°–20'
120–400	± 0°–10'

SPP

MATERIAL:	REF BOM
FINISH:	PAINTING
DRAWN	R.S
DRG.CHKD	C.P.K.
APPROVED	M.P.

TITLE: STRUCTURE FRAME - D
LOWER DECK

SATISH DHAWAN SPACE CENTRE
SOLID PROPELLANT PLANT
I.S.R.O SRIHARIKOTA

PROJECTION

SCALE	DRG. NO.	DATE	SHEET
1 : 20	626-104-00-010-A3-R0	05.08.11	OF

REF. DRG. NO.
COM. FILE NO.

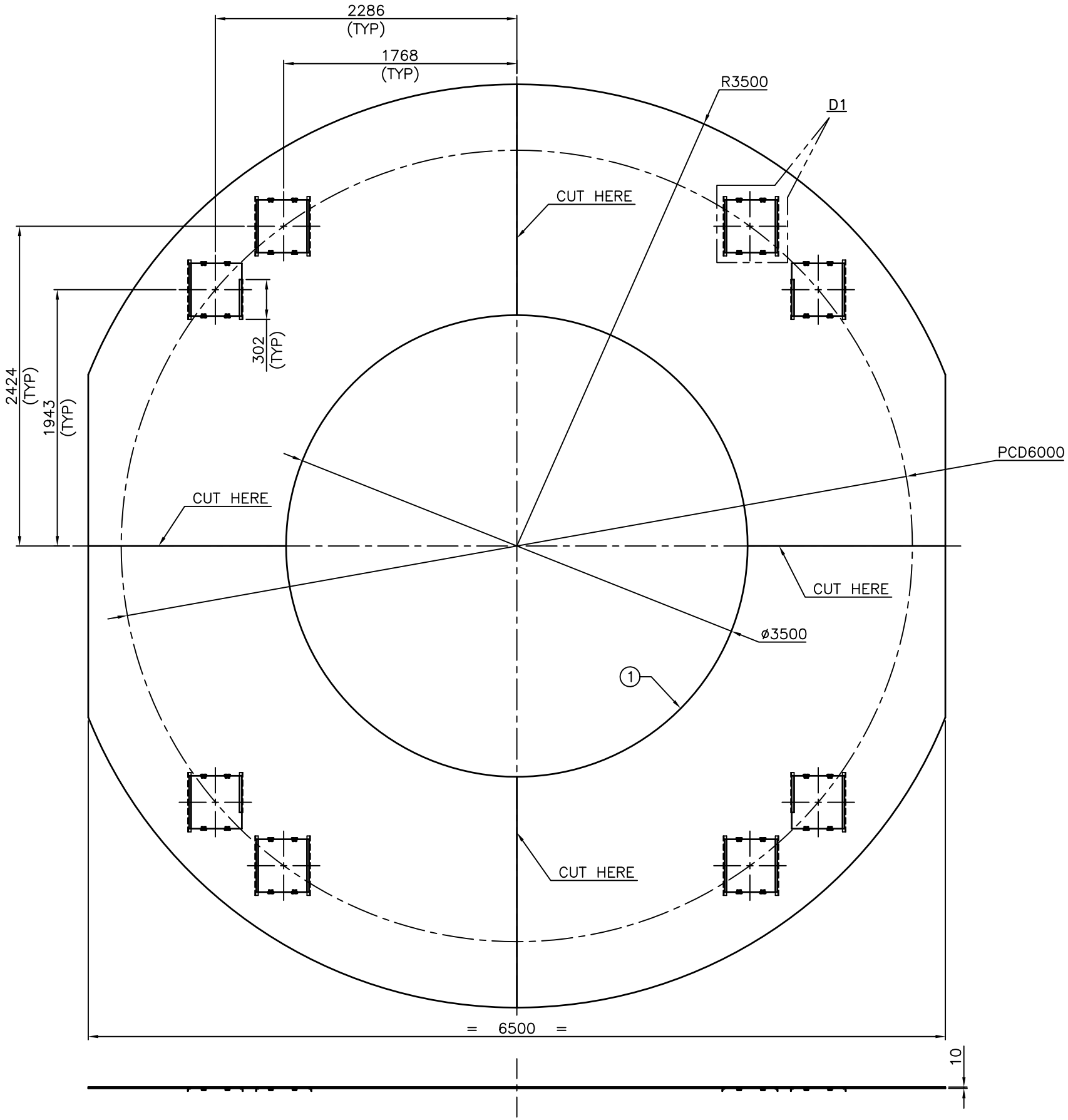

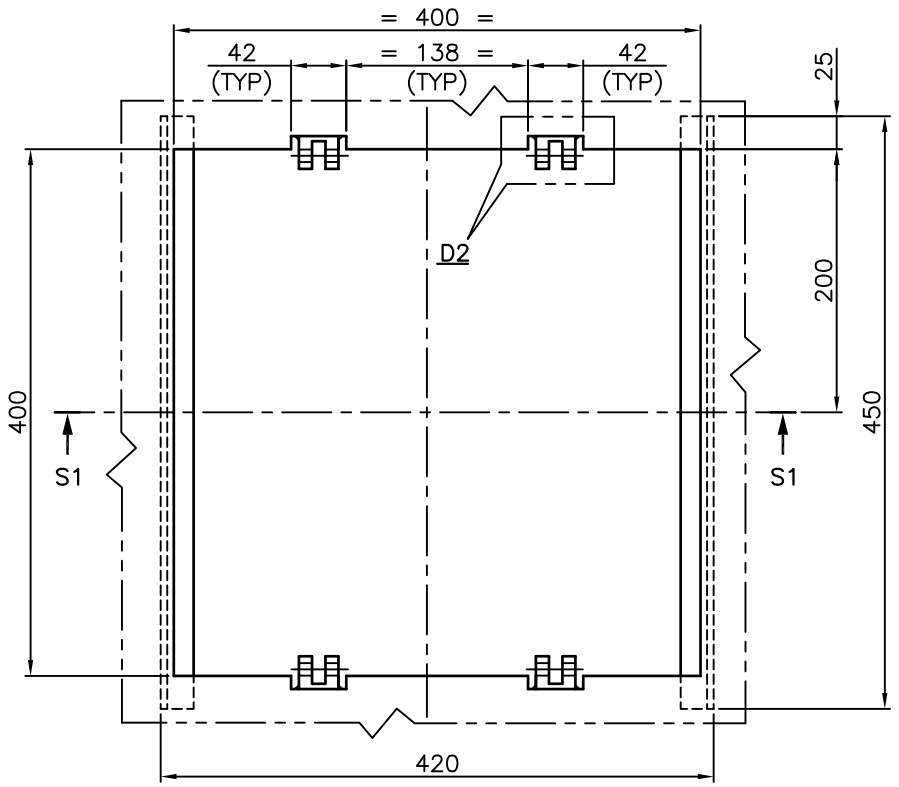

DETAIL D1
SCALE 1:4

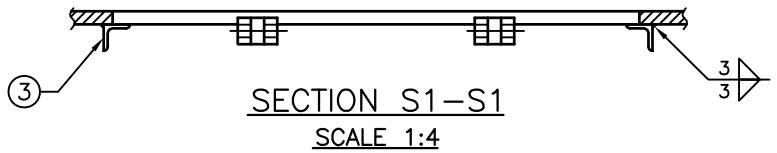

SECTION S1–S1
SCALE 1:4

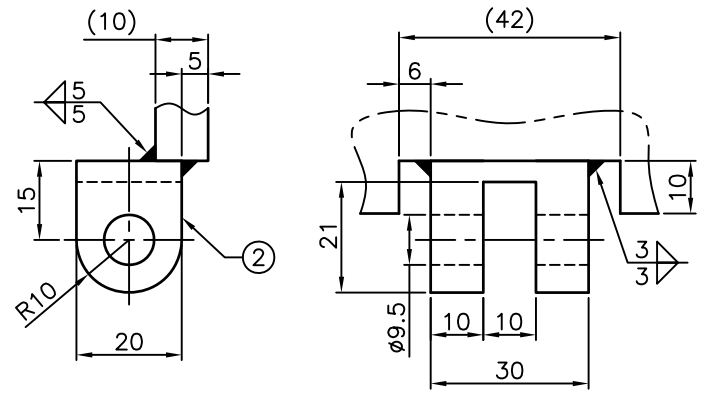

DETAIL D2
SCALE 1:1

NOTES:
1. REMOVE ALL SHARP CORNERS AND BURRS.
2. TO BE A WELDED CONSTRUCTION.

PART NO.	DESCRIPTION	MATERIAL	SPECIFICATION	QTY.
3	ANGLE	IS:2062Gr–B	25 x 25 x 3, L–450	16
2	BLOCK	IS:2062Gr–B	35 x 30 x 20	32
1	CHEQUERED PLATE	IS:3502	3505 x 3255 x 10	04

DO NOT SCALE THE DRAWING
ASK IF IN DOUBT
UNLESS OTHERWISE SHOWN
ALL DIMENSIONS ARE IN MILLIMETERS
REMOVE SHARP EDGES & BURRS
CHAMFER 1 M.M. X 45°
MACHINING FINISH IN MICRONS :–
▽ 8 – 25 ▽▽ 1.6 – 8
▽▽▽ 0.025 – 1.6 ▽▽▽▽ < 0.025

DEVIATION FOR NON TOLERANCED DIMENSIONS (IS –2102)

DIAMETERS & LENGTHS	
UPTO & INCL. 6	+0.1
6 – 30	+0.2
30 – 120	+0.3
120 – 315	+0.5
315 – 1000	+0.8
1000 – 2000	+1.2
2000 – 4000	+2.0
4000 & ABOVE	+3.0

LENGTH IN M.M. OF SHORTER SIDE OF ANGLE UPTO & INCL.	
1– 6	± 1°–0'
6– 30	± 0°–30'
30–120	± 0°–20'
120–400	± 0°–10'

SPP

MATERIAL:	REF BOM
FINISH:	PAINTING
DRAWN	R.S
DRG.CHKD	C.P.K.
APPROVED	M.P.

TITLE: CHEQUERED PLATE - OUTER LOWER DECK

SATISH DHAWAN SPACE CENTRE
SOLID PROPELLANT PLANT
I.S.R.O SRIHARIKOTA

PROJECTION

SCALE	DRG. NO.	DATE	SHEET
1 : 25	626-104-00-011-A3-R0	05.08.11	OF

REF. DRG. NO.
COM. FILE NO.

REF. DRG. NO.
COM. FILE NO.

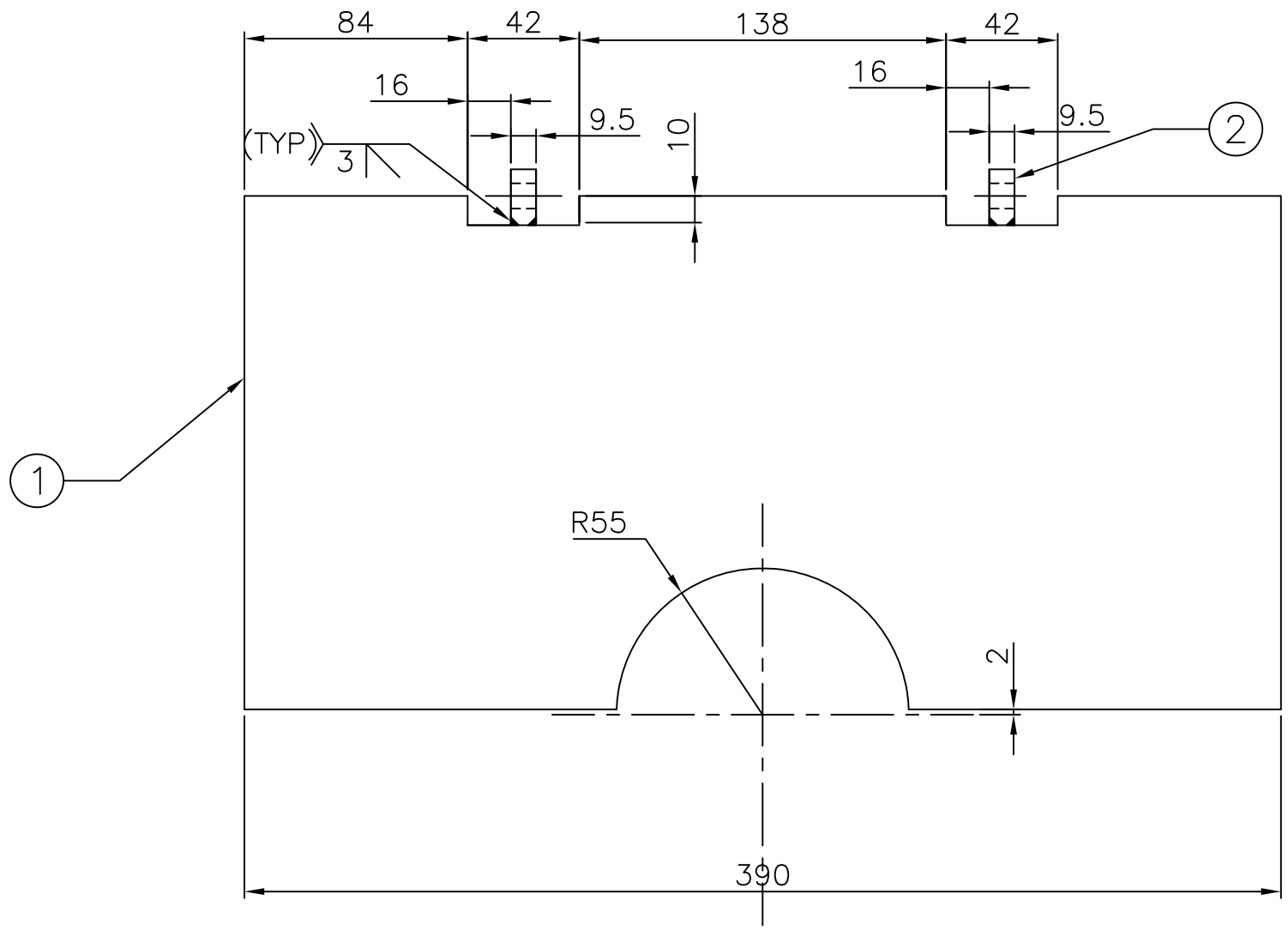

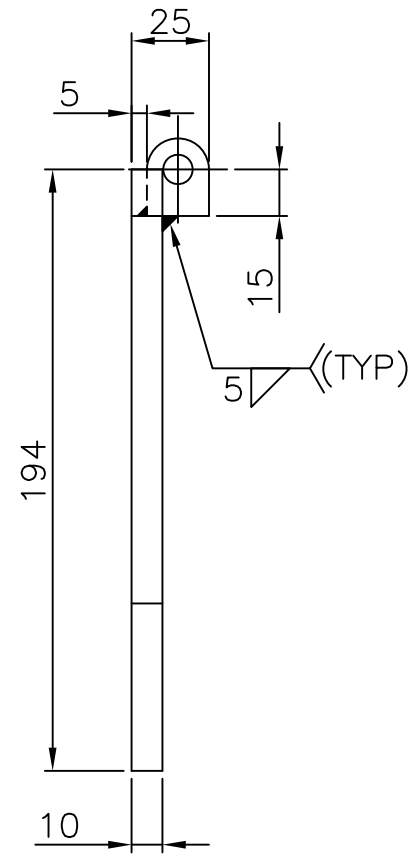

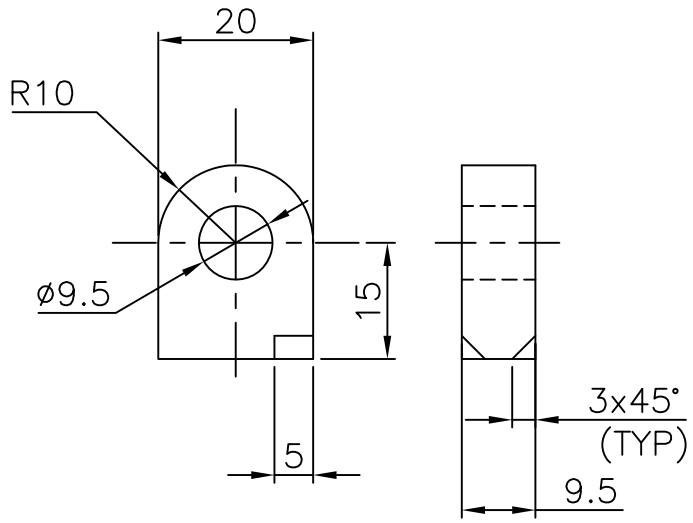

DETAIL OF ITEM NO 2

SCALE 1:1

NOTES:

1. REMOVE ALL SHARP CORNERS AND BURRS.
2. TO BE A WELDED CONSTRUCTION.

PART NO.	DESCRIPTION	MATERIAL	SPECIFICATION	QTY.
2	PLATE	IS:2062 Gr.B	30x25x10THK	02
1	CHEQUERED PLATE	IS 3502	200x400x10THK	01

DO NOT SCALE THE DRAWING
ASK IF IN DOUBT
UNLESS OTHERWISE SHOWN
ALL DIMENSIONS ARE IN MILLIMETERS
REMOVE SHARP EDGES & BURRS
CHAMFER 1 M.M. X 45°
MACHINING FINISH IN MICRONS :-
▽ 8 – 25 ▽▽ 1.6 – 8
▽▽▽ 0.025 – 1.6 ▽▽▽▽ < 0.025

DEVIATION FOR NON TOLERANCED DIMENSIONS (IS –2102)

DIAMETERS & LENGTHS		LENGTH IN M.M. OF SHORTER SIDE OF ANGLE UPTO & INCL.	
UPTO & INCL. 6	+0.1	1– 6	± 1°–0'
6 – 30	+0.2	6– 30	± 0°–30'
30 – 120	+0.3	30–120	± 0°–20'
120 – 315	+0.5	120–400	± 0°–10'
315 – 1000	+0.8		
1000 – 2000	+1.2		
2000 – 4000	+2.0		
4000 & ABOVE	+3.0		

SPP

MATERIAL:	REF BOM
FINISH:	PAINTING
DRAWN	R.S
DRG.CHKD	C.P.K.
APPROVED	M.P.

TITLE: COVER PLATE - A

SATISH DHAWAN SPACE CENTRE
SOLID PROPELLANT PLANT
I.S.R.O SRIHARIKOTA

PROJECTION

SCALE	DRG. NO.	DATE	SHEET
1 : 2.5	626-104-00-012-A3-R0	05.08.11	OF

REF. DRG. NO.
COM. FILE NO.

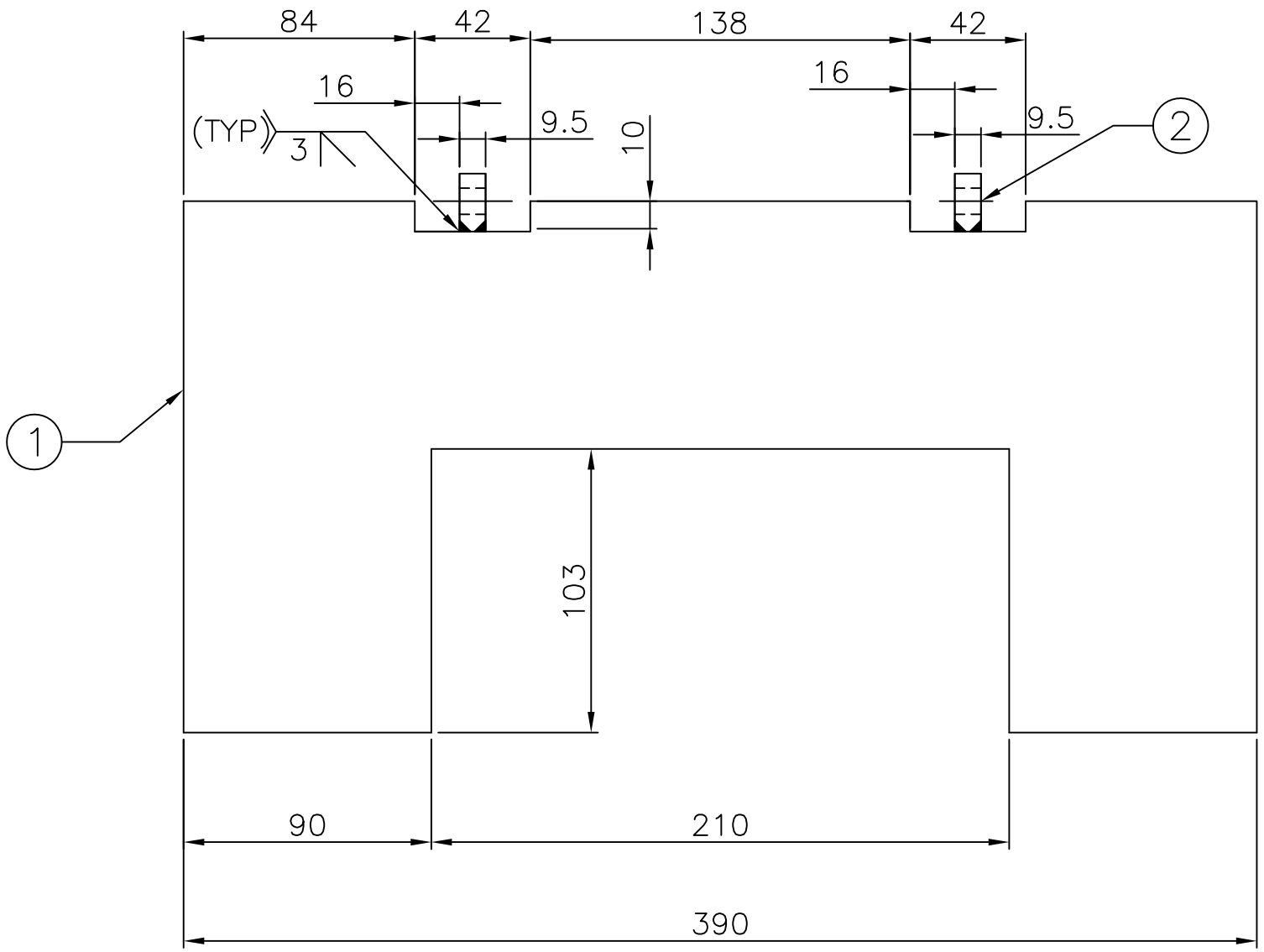

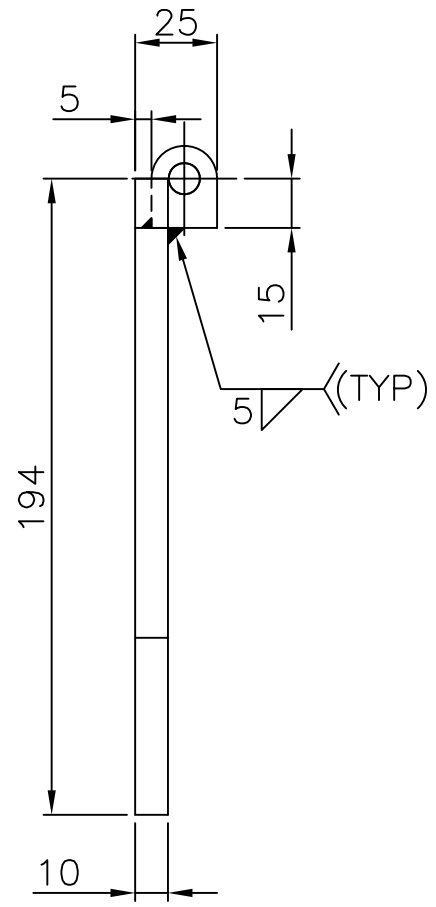

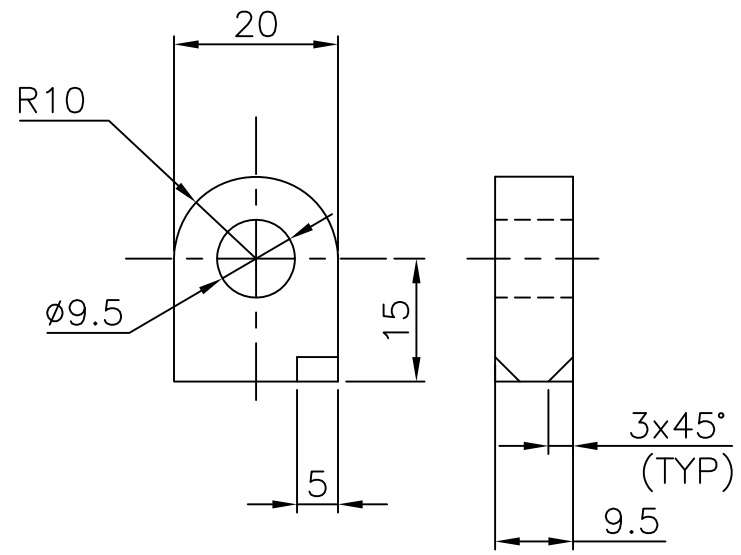

DETAIL OF ITEM NO 2

SCALE 1:1

NOTES:

1. REMOVE ALL SHARP CORNERS AND BURRS.
2. TO BE A WELDED CONSTRUCTION.

PART NO.	DESCRIPTION	MATERIAL	SPECIFICATION	QTY.
2	PLATE	IS:2062 Gr.B	30x25x10THK	02
1	CHEQUERED PLATE	IS 3502	200x400x10THK	01

DO NOT SCALE THE DRAWING
ASK IF IN DOUBT
UNLESS OTHERWISE SHOWN
ALL DIMENSIONS ARE IN MILLIMETERS
REMOVE SHARP EDGES & BURRS
CHAMFER 1 M.M. X 45°
MACHINING FINISH IN MICRONS :-
▽ 8 – 25 ▽▽ 1.6 – 8
▽▽▽ 0.025 – 1.6 ▽▽▽▽ < 0.025

DEVIATION FOR NON TOLERANCED DIMENSIONS (IS –2102)

DIAMETERS & LENGTHS		LENGTH IN M.M. OF SHORTER SIDE OF ANGLE UPTO & INCL.	
UPTO & INCL. 6	+0.1	1– 6	± 1°–0'
6 – 30	+0.2	6– 30	± 0°–30'
30 – 120	+0.3	30–120	± 0°–20'
120 – 315	+0.5	120–400	± 0°–10'
315 – 1000	+0.8		
1000 – 2000	+1.2		
2000 – 4000	+2.0		
4000 & ABOVE	+3.0		

SPP

MATERIAL:	REF BOM
FINISH:	PAINTING
DRAWN	R.S
DRG.CHKD	C.P.K.
APPROVED	M.P.

TITLE COVER PLATE - B

SATISH DHAWAN SPACE CENTRE
SOLID PROPELLANT PLANT
I.S.R.O SRIHARIKOTA

PROJECTION

SCALE	DRG. NO.	DATE	SHEET
1 : 2	626-104-00-013-A3-R0	05.08.11	OF

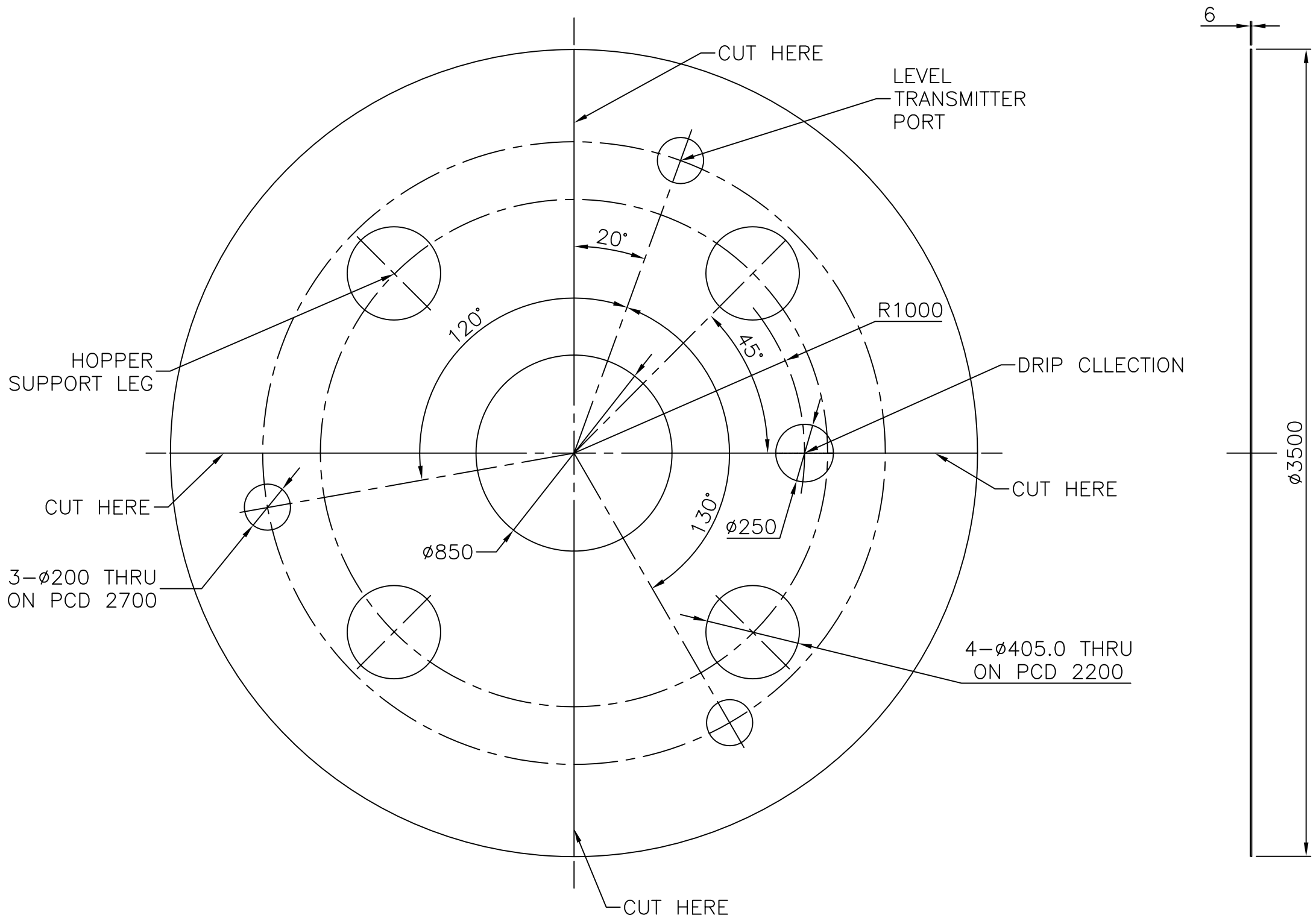

NOTES:

1. REMOVE ALL SHARP CORNERS AND BURRS.

DO NOT SCALE THE DRAWING
ASK IF IN DOUBT
UNLESS OTHERWISE SHOWN
ALL DIMENSIONS ARE IN MILLIMETERS
REMOVE SHARP EDGES & BURRS
CHAMFER 1 M.M. X 45°
MACHINING FINISH IN MICRONS :–
▽ 8 – 25 ▽▽ 1.6 – 8
▽▽▽ 0.025 – 1.6 ▽▽▽▽ < 0.025

DEVIATION FOR NON TOLERANCED DIMENSIONS (IS –2102)

DIAMETERS & LENGTHS	
UPTO & INCL. 6	+0.1
6 – 30	+0.2
30 – 120	+0.3
120 – 315	+0.5
315 – 1000	+0.8
1000 – 2000	+1.2
2000 – 4000	+2.0
4000 & ABOVE	+3.0

LENGTH IN M.M. OF SHORTER SIDE OF ANGLE UPTO & INCL.	
1– 6	± 1°–00'
6– 30	± 0°–30'
30–120	± 0°–20'
120–400	± 0°–10'

SPP

MATERIAL: Ø 3550 x 6 THK
IS: 3502 CHEQUER SHEET
FINISH:

DRAWN	R.S
DRG.CHKD	C.P.K.
APPROVED	M.P.

TITLE CHEQUERED PLATE - INNER

SATISH DHAWAN SPACE CENTRE
SOLID PROPELLANT PLANT
I.S.R.O SRIHARIKOTA

PROJECTION

SCALE	DRG. NO.	DATE	SHEET
1 : 20	626-104-00-014-A3-R0	05.08.11	OF

REF. DRG. NO.
COM. FILE NO.

REF. DRG. NO.
COM. FILE NO.

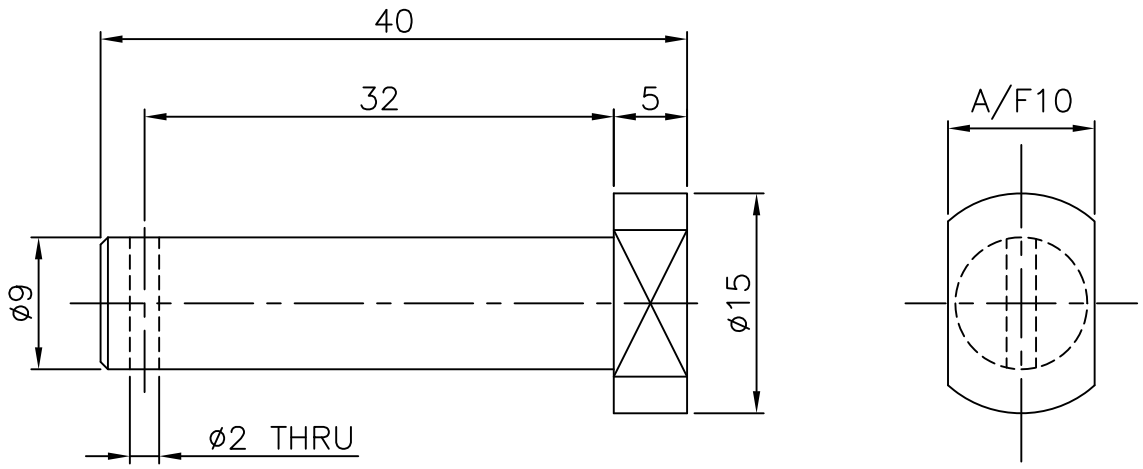

NOTES:

1. REMOVE ALL SHARP CORNERS AND BURRS.

DO NOT SCALE THE DRAWING
ASK IF IN DOUBT
UNLESS OTHERWISE SHOWN
ALL DIMENSIONS ARE IN MILLIMETERS
REMOVE SHARP EDGES & BURRS
CHAMFER 1 M.M. X 45°
MACHINING FINISH IN MICRONS :–
▽ 8 – 25 ▽▽ 1.6 – 8
▽▽▽ 0.025 – 1.6 ▽▽▽▽ < 0.025

DEVIATION FOR NON TOLERANCED DIMENSIONS (IS –2102)

DIAMETERS & LENGTHS	
UPTO & INCL. 6	+0.1
6 – 30	+0.2
30 – 120	+0.3
120 – 315	+0.5
315 – 1000	+0.8
1000 – 2000	+1.2
2000 – 4000	+2.0
4000 & ABOVE	+3.0

LENGTH IN M.M. OF SHORTER SIDE OF ANGLE UPTO & INCL.
1– 6 ± 1°–0′
6– 30 ± 0°–30′
30–120 ± 0°–20′
120–400 ± 0°–10′

SPP

MATERIAL:	ROD MS Ø 20 x 45 L
FINISH:	BLACKENING
DRAWN	R.S
DRG.CHKD	C.P.K.
APPROVED	M.P.

TITLE: PIN

SATISH DHAWAN SPACE CENTRE
SOLID PROPELLANT PLANT
I.S.R.O SRIHARIKOTA

SCALE	DRG. NO.	DATE	SHEET
2 : 1	626-104-00-015-A4-R0	05.08.11	OF

PROJECTION

PART NO.	DESCRIPTION	MATERIAL	SPECIFICATION	QTY.
1	DISC	IS:2062 Gr B	ø205 x 12THK	01
2	PIPE	IS:2062 Gr B	PIPE 6"(SCH 80)OD:168.3 WT:10.97 L:595	01

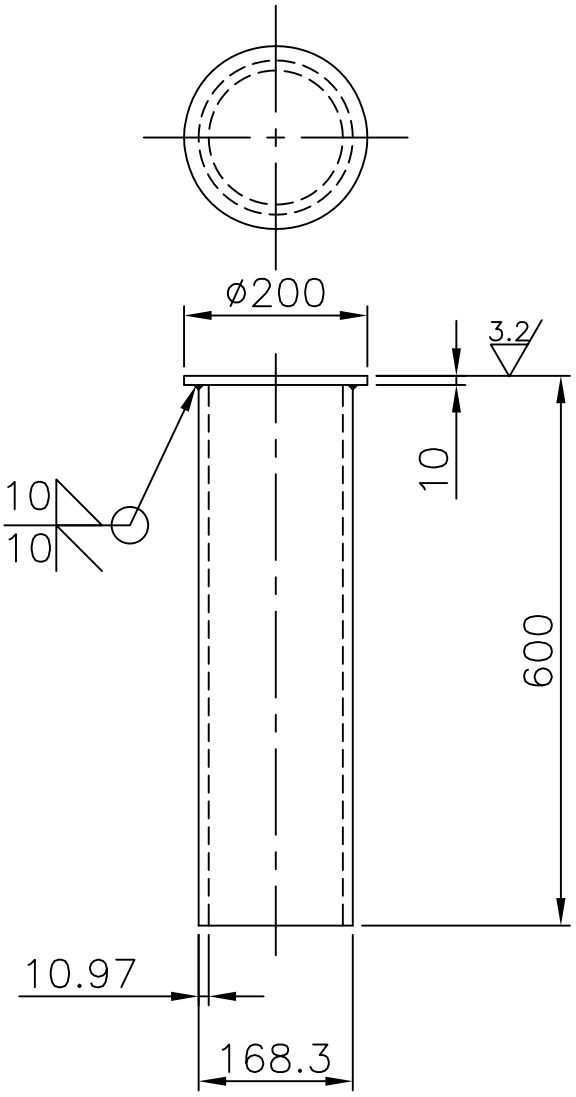

NOTES:

1. REMOVE ALL SHARP CORNERS AND BURRS.
2. TO BE A WELDED CONSTRUCTION.

DO NOT SCALE THE DRAWING
ASK IF IN DOUBT
UNLESS OTHERWISE SHOWN
ALL DIMENSIONS ARE IN MILLIMETERS
REMOVE SHARP EDGES & BURRS
CHAMFER 1 M.M. X 45°
MACHINING FINISH IN MICRONS :-
▽ 8 – 25 ▽▽ 1.6 – 8
▽▽▽ 0.025 – 1.6 ▽▽▽▽ < 0.025

DEVIATION FOR NON TOLERANCED DIMENSIONS (IS –2102)

DIAMETERS & LENGTHS	
UPTO & INCL. 6	+0.1
6 – 30	+0.2
30 – 120	+0.3
120 – 315	+0.5
315 – 1000	+0.8
1000 – 2000	+1.2
2000 – 4000	+2.0
4000 & ABOVE	+3.0

LENGTH IN M.M. OF SHORTER SIDE OF ANGLE UPTO & INCL.	
1– 6	± 1°–0'
6– 30	± 0°–30'
30–120	± 0°–20'
120–400	± 0°–10'

SPP

TITLE: LOWER DECK SUPPORT LEG

MATERIAL: REF. BOM
FINISH: PAINTING
DRAWN: R.S
DRG.CHKD: C.P.K.
APPROVED: M.P.

SATISH DHAWAN SPACE CENTRE
SOLID PROPELLANT PLANT
I.S.R.O SRIHARIKOTA

PROJECTION

SCALE	DRG. NO.	DATE	SHEET
1 : 8	626-104-00-016-A4-R0	05.08.11	OF

REF. DRG. NO.
COM. FILE NO.

REF. DRG. NO.

COM. FILE NO.

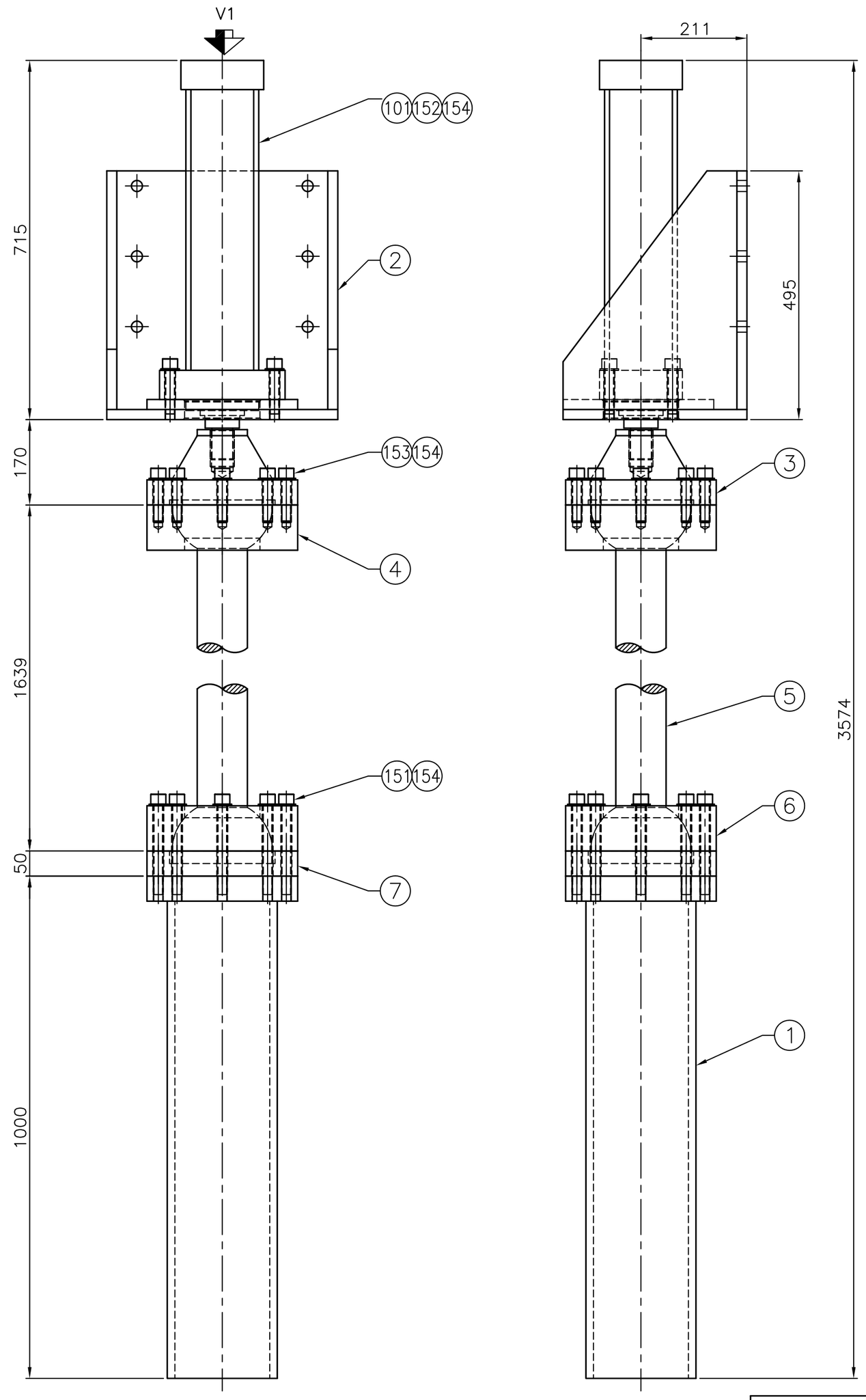

PART NO.	DESCRIPTION	MATERIAL	SPECIFICATION	QTY.
1	VACUUM LID LIFTING LEG SUPPORT			
2	MOUNTING BRACKET	REFER DWG.	626-105-00-003-A3-R0	01
3	UPPER CUP-A	REFER DWG.	626-105-00-004-A4-R0	01
4	UPPER CUP-B	REFER DWG.	626-105-00-005-A4-R0	01
5	DUMB BELL SHAFT VACCUM LID LIFTING	REFER DWG.	626-105-00-006-A3-R0	01
6	LOWER CUP-A	REFER DWG.	626-105-00-008-A4-R0	01
7	LOWER CUP-B	REFER DWG.	626-105-00-009-A4-R0	01
101	HYDRAULIC CYLINDER	PARKER	Bore:ø125,Rod:ø70,Stroke:500	01
151	HEX. SOC. HEAD CAP SCREW	IS:2269-1967	M20 x 180	08
152	HEX. SOC. HEAD CAP SCREW	IS:2269-1967	M20 x 90	04
153	HEX. SOC. HEAD CAP SCREW	IS:2269-1967	M20 x 85	08
154	PLAIN WASHER	IS:5370-1969	M20	20

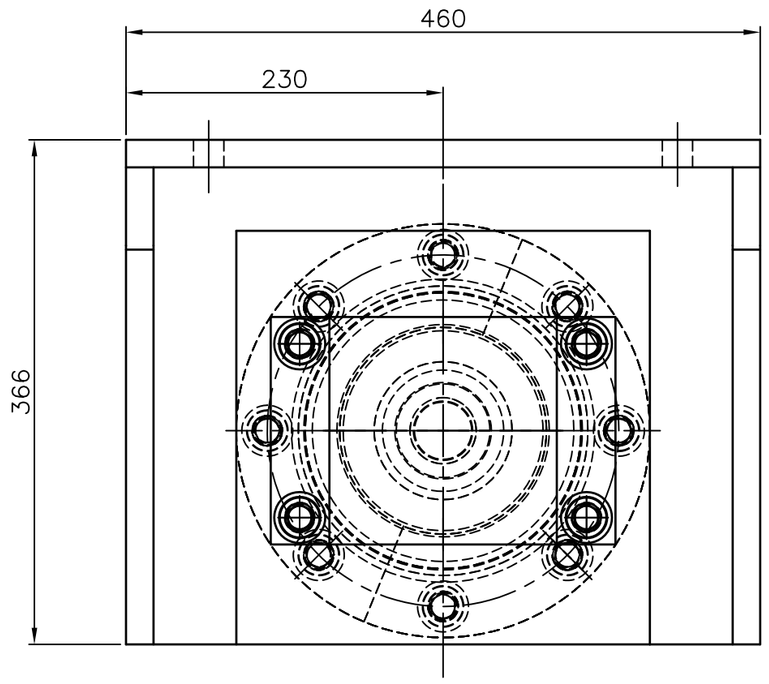

VIEW V1
SCALE 1:1.875

> PART No. 1 is available at site and need not be supplied.
> Items mentioned are for One assembly. Four such assemblies are required.

DO NOT SCALE THE DRAWING
ASK IF IN DOUBT
UNLESS OTHERWISE SHOWN
ALL DIMENSIONS ARE IN MILLIMETERS
REMOVE SHARP EDGES & BURRS
CHAMFER 1 M.M. X 45°
MACHINING FINISH IN MICRONS :-
▽ 8 – 25 ▽▽ 1.6 – 8
▽▽▽ 0.025 – 1.6 ▽▽▽▽ < 0.025

DEVIATION FOR NON TOLERANCED DIMENSIONS (IS –2102)

DIAMETERS & LENGTHS	
UPTO & INCL. 6	+0.1
6 – 30	+0.2
30 – 120	+0.3
120 – 315	+0.5
315 – 1000	+0.8
1000 – 2000	+1.2
2000 – 4000	+2.0
4000 & ABOVE	+3.0

LENGTH IN M.M. OF SHORTER SIDE OF ANGLE UPTO & INCL.	
1– 6	± 1°–00'
6– 30	± 0°–30'
30–120	± 0°–20'
120–400	± 0°–10'

SPP

MATERIAL:	REF BOM
FINISH:	
DRAWN	R.S
DRG.CHKD	C.P.K
APPROVED	M.P

TITLE
VACUUM LID
LIFTING ASSEMBLY

SATISH DHAWAN SPACE CENTRE
SOLID PROPELLANT PLANT
I.S.R.O SRIHARIKOTA

PROJECTION

SCALE	DRG. NO.	DATE	SHEET
1 : 8	626-105-00-001-A2-R0	05.08.11	OF

PART NO.	DESCRIPTION	MATERIAL	SPECIFICATION	QTY.
1	PLATE	IS:2062 Gr. B	480x465x25 THK	01
2	PLATE	IS:2062 Gr. B	465x370x25 THK	01
3	PLATE	IS:2062 Gr. B	305x305x32 THK	01
4	PLATE	IS:2062 Gr. B	346x475x20 THK	02

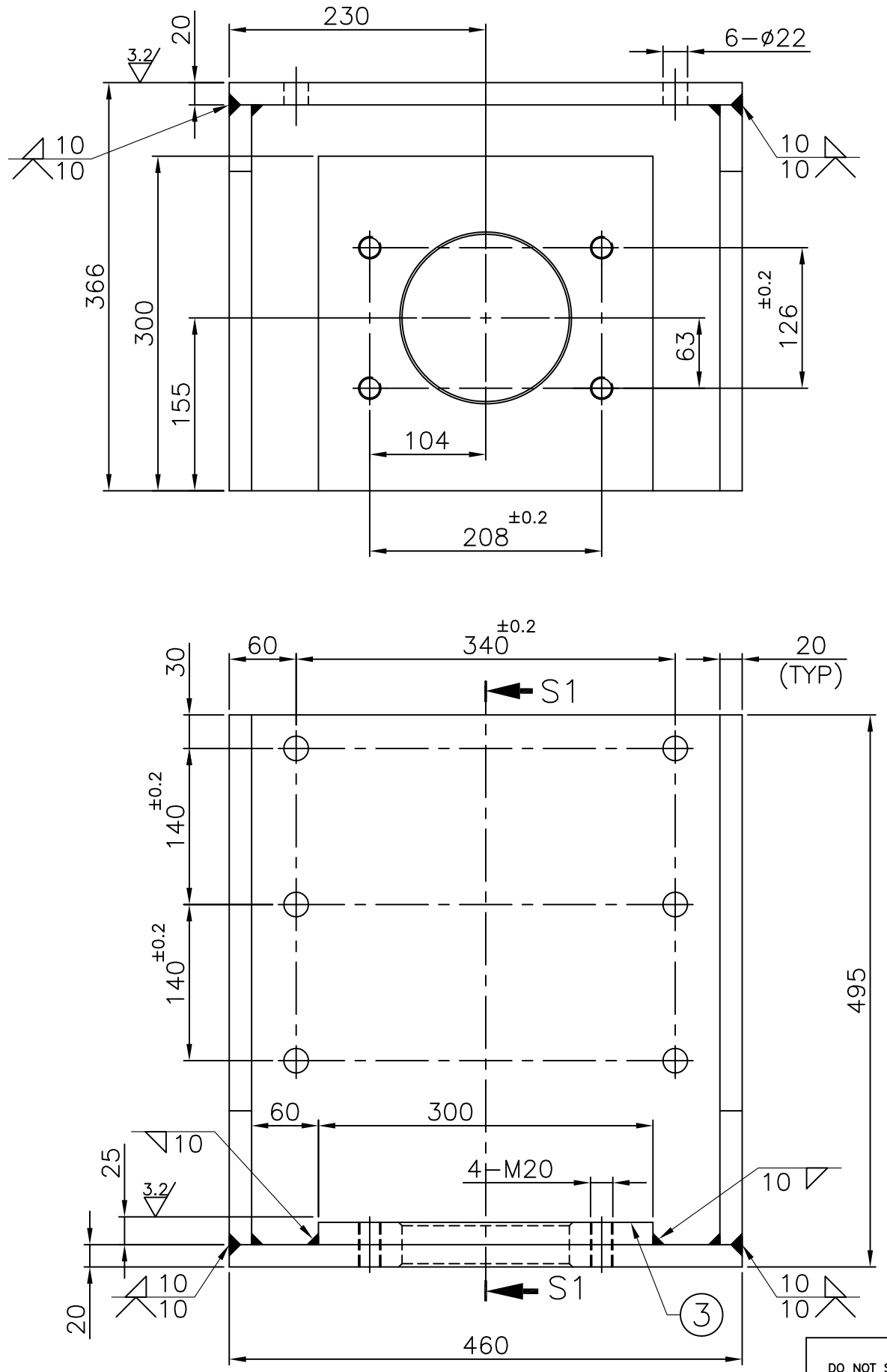

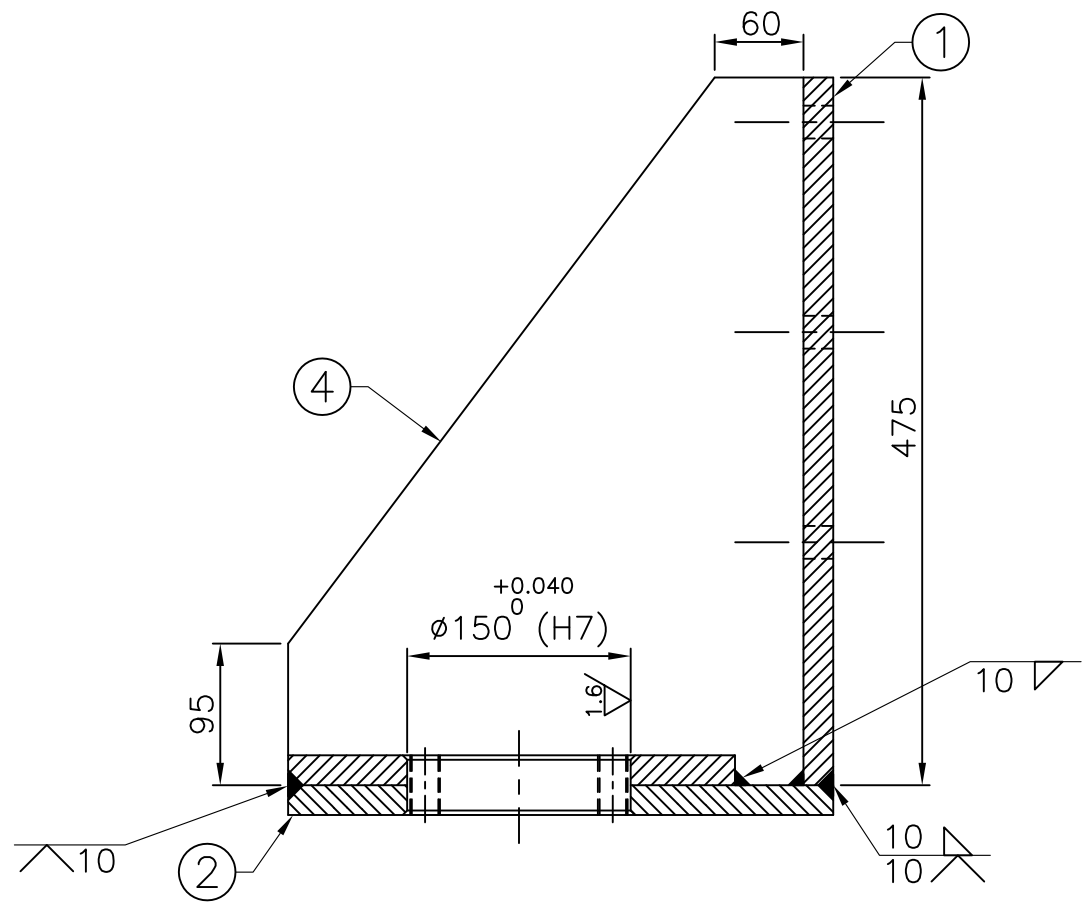

SECTION S1–S1

NOTES:

1. REMOVE ALL SHARP CORNERS AND BURRS.
2. STRUCTURAL WELDS SHALL BE OF FULL PENETRATION WELDS.
4. MASK THE MACHINED SURFACESES BEFORE PAINTING.

DO NOT SCALE THE DRAWING
ASK IF IN DOUBT
UNLESS OTHERWISE SHOWN
ALL DIMENSIONS ARE IN MILLIMETERS
REMOVE SHARP EDGES & BURRS
CHAMFER 1 M.M. X 45°
MACHINING FINISH IN MICRONS :–
▽ 8 – 25 ▽▽ 1.6 – 8
▽▽▽ 0.025 – 1.6 ▽▽▽▽ < 0.025

DEVIATION FOR NON TOLERANCED DIMENSIONS (IS –2102)

DIAMETERS & LENGTHS	
UPTO & INCL. 6	+0.1
6 – 30	+0.2
30 – 120	+0.3
120 – 315	+0.5
315 – 1000	+0.8
1000 – 2000	+1.2
2000 – 4000	+2.0
4000 & ABOVE	+3.0

LENGTH IN M.M. OF SHORTER SIDE OF ANGLE UPTO & INCL.	
1– 6	± 1°–00'
6– 30	± 0°–30'
30–120	± 0°–20'
120–400	± 0°–10'

SPP

MATERIAL:	REF BOM
FINISH:	PAINTING
DRAWN	R.S
DRG.CHKD	C.P.K.
APPROVED	M.P.

TITLE: MOUNTING BRACKET

SATISH DHAWAN SPACE CENTRE
SOLID PROPELLANT PLANT
I.S.R.O SRIHARIKOTA

PROJECTION

SCALE	DRG. NO.	DATE	SHEET
1 : 5	626-105-00-003-A3-R0	05.08.11	OF

REF. DRG. NO.
COM. FILE NO.

REF. DRG. NO.
COM. FILE NO.

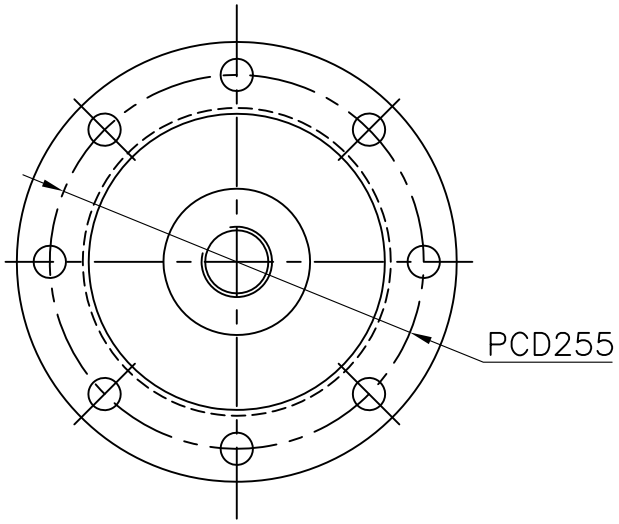

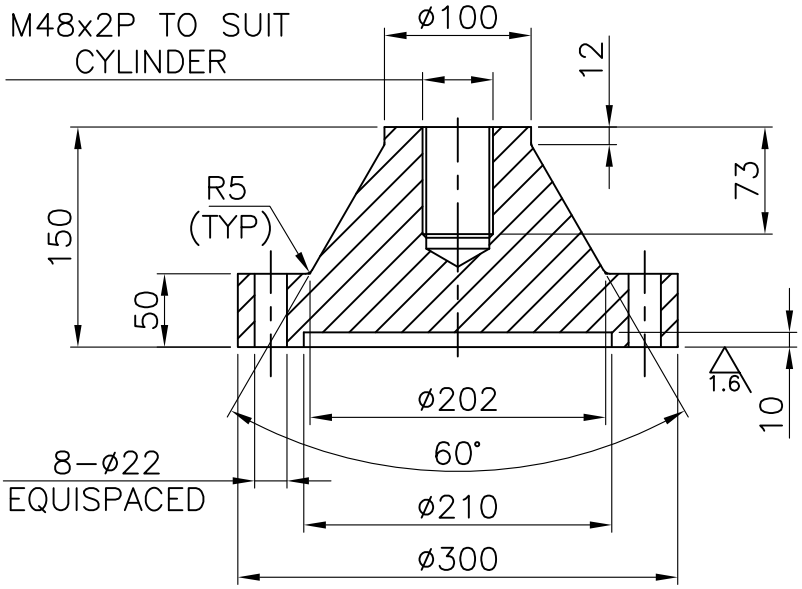

NOTES:

1. REMOVE ALL SHARP CORNERS AND BURRS.
2. TO BE HEAT TREATED & TEMPERED TO 20~24 HRC.

DO NOT SCALE THE DRAWING
ASK IF IN DOUBT
UNLESS OTHERWISE SHOWN
ALL DIMENSIONS ARE IN MILLIMETERS
REMOVE SHARP EDGES & BURRS
CHAMFER 1 M.M. X 45°
MACHINING FINISH IN MICRONS :–
▽ 8 – 25 ▽▽ 1.6 – 8
▽▽▽ 0.025 – 1.6 ▽▽▽▽ < 0.025

DEVIATION FOR NON TOLERANCED DIMENSIONS (IS –2102)

DIAMETERS & LENGTHS		LENGTH IN M.M. OF SHORTER SIDE OF ANGLE UPTO & INCL.	
UPTO & INCL. 6	+0.1	1– 6	± 1°–0'
6 – 30	+0.2	6– 30	± 0°–30'
30 – 120	+0.3	30–120	± 0°–20'
120 – 315	+0.5	120–400	± 0°–10'
315 – 1000	+0.8		
1000 – 2000	+1.2		
2000 – 4000	+2.0		
4000 & ABOVE	+3.0		

SPP

MATERIAL:	ROD En-8 Ø 305 x 155 LONG
FINISH:	BLACKENING
DRAWN	R.S
DRG.CHKD	C.P.K.
APPROVED	M.P.

TITLE: UPPER CUP - A

SATISH DHAWAN SPACE CENTRE
SOLID PROPELLANT PLANT
I.S.R.O SRIHARIKOTA

SCALE	DRG. NO.	DATE	SHEET
1 : 5	626-105-00-004-A4-R0	05.08.11	OF

PROJECTION

REF. DRG. NO.
COM. FILE NO.

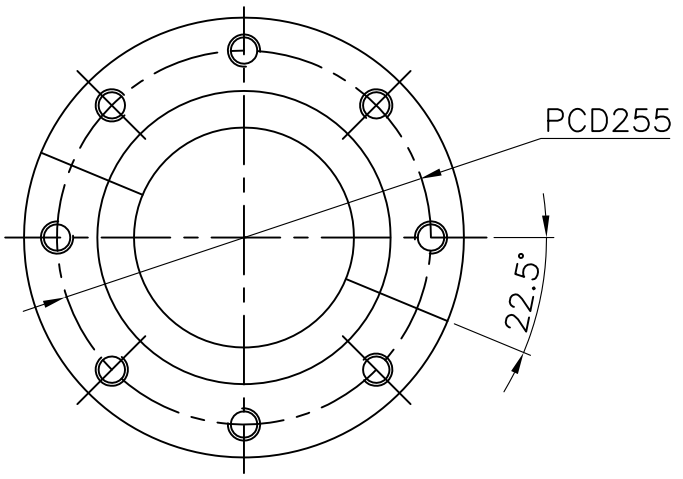

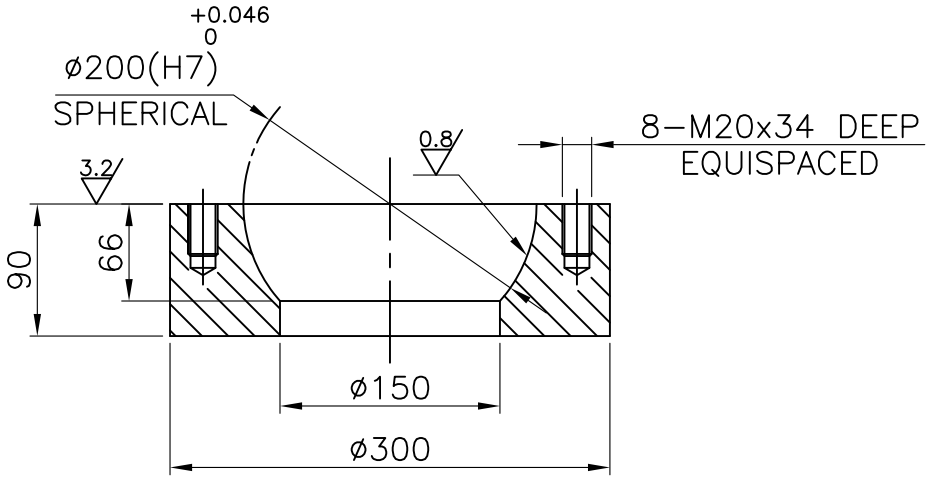

NOTES:

1. REMOVE ALL SHARP CORNERS AND BURRS.
2. TO BE HEAT TREATED & TEMPERED TO 30~35 HRC.
3. AFTER COMPLETION OF ALL MACHINING COMPONENT TO BE SLIT TO 2 PART BY WIRE CUTTING. COMPONENT TO BE MARK & KEEP IN SAME PLACE.

DO NOT SCALE THE DRAWING
ASK IF IN DOUBT
UNLESS OTHERWISE SHOWN
ALL DIMENSIONS ARE IN MILLIMETERS
REMOVE SHARP EDGES & BURRS
CHAMFER 1 M.M. X 45°
MACHINING FINISH IN MICRONS :–
▽ 8 – 25 ▽▽ 1.6 – 8
▽▽▽ 0.025 – 1.6 ▽▽▽▽ < 0.025

DEVIATION FOR NON TOLERANCED DIMENSIONS (IS –2102)

DIAMETERS & LENGTHS	
UPTO & INCL. 6	+0.1
6 – 30	+0.2
30 – 120	+0.3
120 – 315	+0.5
315 – 1000	+0.8
1000 – 2000	+1.2
2000 – 4000	+2.0
4000 & ABOVE	+3.0

LENGTH IN M.M. OF SHORTER SIDE OF ANGLE UPTO & INCL.	
1– 6	± 1°–0′
6– 30	± 0°–30′
30–120	± 0°–20′
120–400	± 0°–10′

SPP

TITLE: UPPER CUP - B

MATERIAL: ROD En - 24 Ø 305 x 100 LONG
FINISH: BLACKENING

DRAWN	R.S
DRG.CHKD	C.P.K.
APPROVED	M.P.

SATISH DHAWAN SPACE CENTRE
SOLID PROPELLANT PLANT
I.S.R.O SRIHARIKOTA

SCALE	DRG. NO.	DATE	SHEET
1 : 5	626-105-00-005-A4-R0	05.08.11	OF

PROJECTION

REF. DRG. NO.
COM. FILE NO.

MACHINED

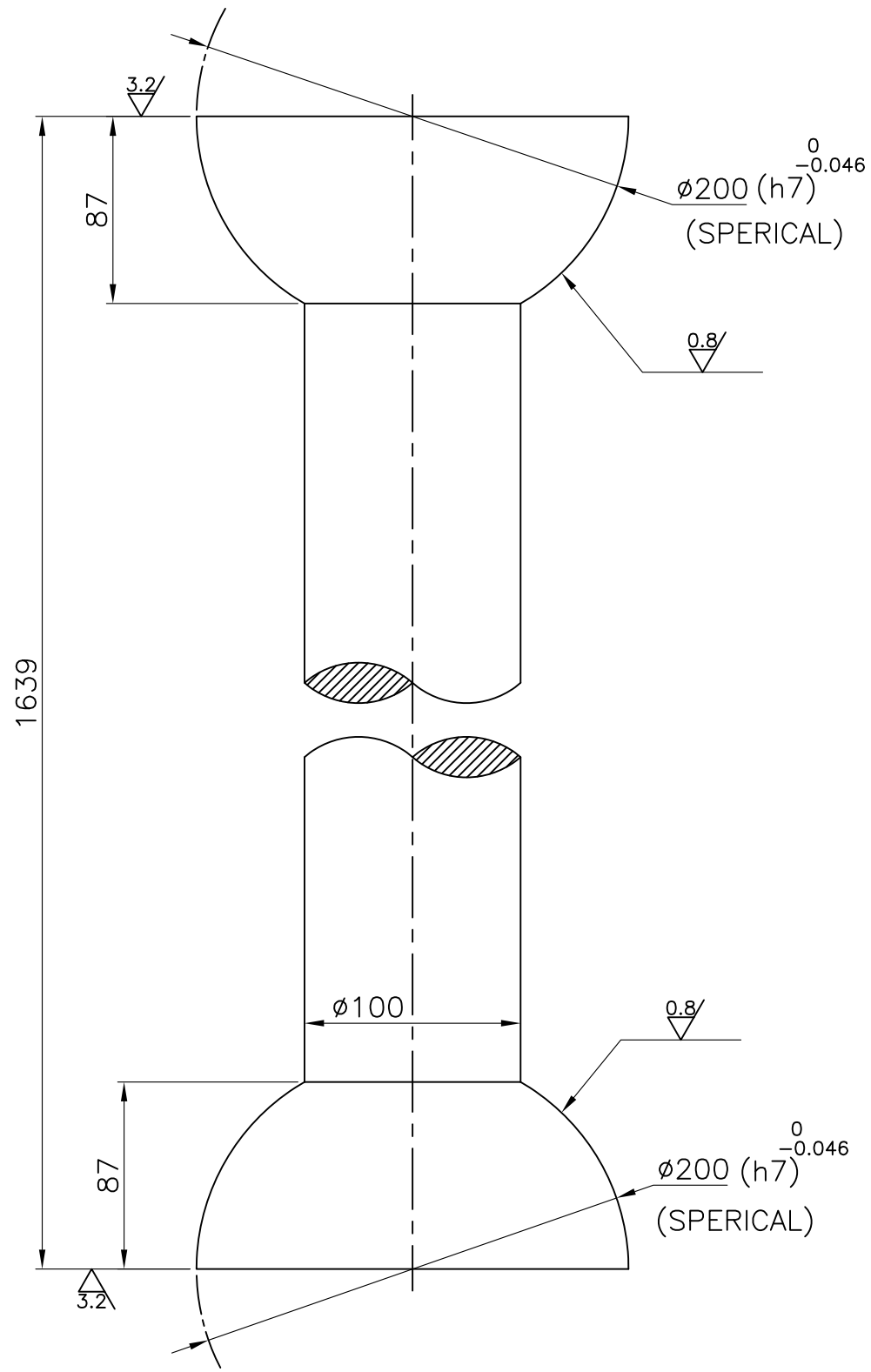

NOTES:

1. REMOVE ALL SHARP CORNERS AND BURRS.
2. TO BE HEAT TREATED & TEMPERED TO 30~35 HRC.

DO NOT SCALE THE DRAWING
ASK IF IN DOUBT
UNLESS OTHERWISE SHOWN
ALL DIMENSIONS ARE IN MILLIMETERS
REMOVE SHARP EDGES & BURRS
CHAMFER 1 M.M. X 45°
MACHINING FINISH IN MICRONS :–
▽ 8 – 25 ▽▽ 1.6 – 8
▽▽▽ 0.025 – 1.6 ▽▽▽▽ < 0.025

DEVIATION FOR NON TOLERANCED DIMENSIONS (IS –2102)

DIAMETERS & LENGTHS	
UPTO & INCL. 6	+0.1
6 – 30	+0.2
30 – 120	+0.3
120 – 315	+0.5
315 – 1000	+0.8
1000 – 2000	+1.2
2000 – 4000	+2.0
4000 & ABOVE	+3.0

LENGTH IN M.M. OF SHORTER SIDE OF ANGLE UPTO & INCL.	
1– 6	± 1°–0'
6– 30	± 0°–30'
30–120	± 0°–20'
120–400	± 0°–10'

SPP

MATERIAL:	REF FORGE DWG DWG No 626-105-00-007-A3-R0
FINISH:	BLACKENING
DRAWN	R.S
DRG.CHKD	C.P.K.
APPROVED	M.P.

TITLE DUMB-BELL SHAFT (Machined)
VACUUM LID LIFTING

SATISH DHAWAN SPACE CENTRE
SOLID PROPELLANT PLANT
I.S.R.O SRIHARIKOTA

PROJECTION

SCALE	DRG. NO.	DATE	SHEET
1 : 3	626-105-00-006-A3-R0	05.08.11	OF

REF. DRG. NO.
COM. FILE NO.

FORGING

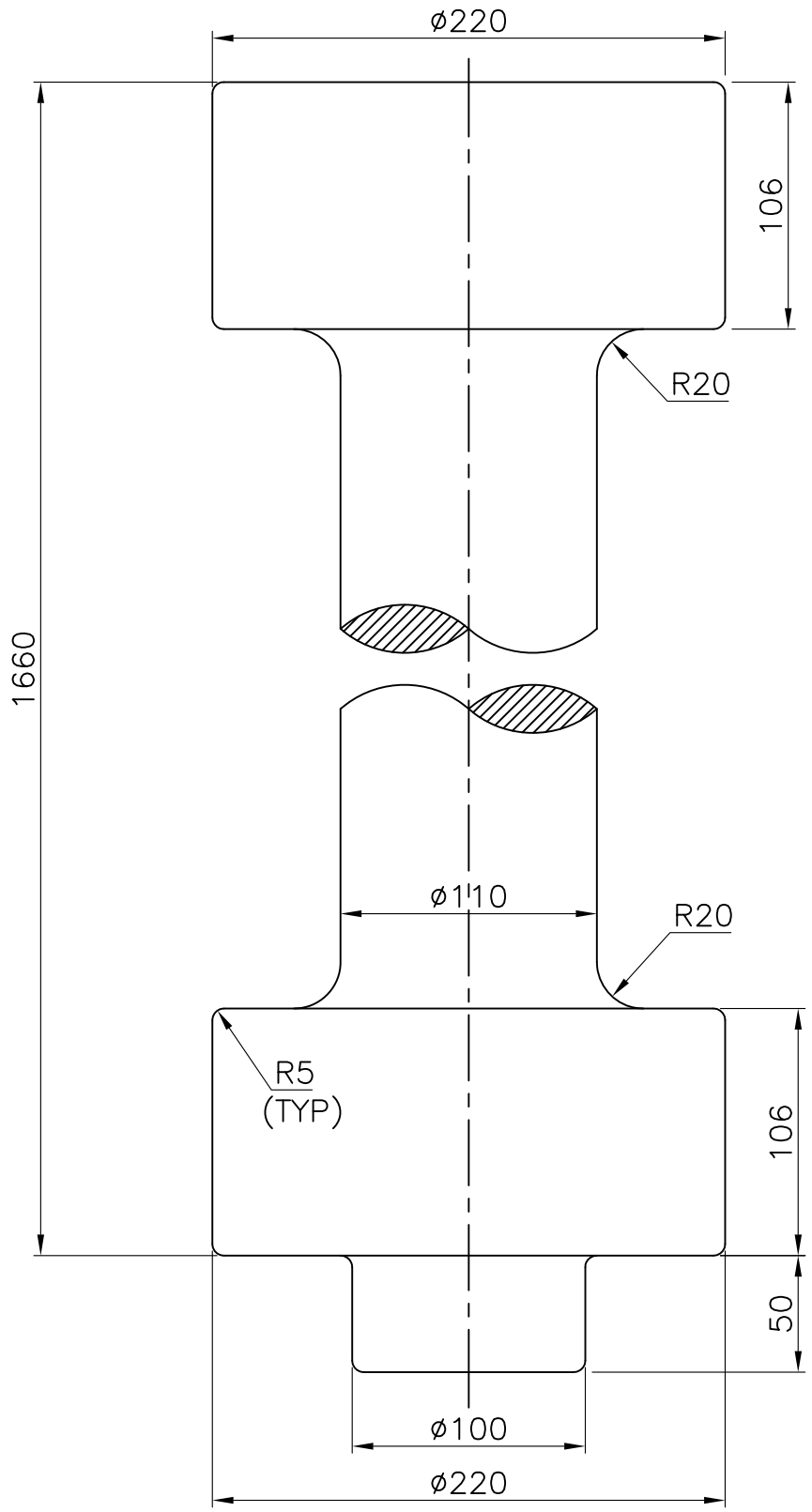

NOTES:

1. REMOVE ALL SHARP CORNERS AND BURRS.
2. COMPONENT TO BE FORGED, QUENCHED AND TEMPERED.
3. COMPONENT TO BE SUBJECTED TO ULTRASONIC EXAMINATION AS PER ASTM A 388/A 388M–05.
4. REPAIR WELDING IS NOT PERMITTED ON THE COMPONENT.
5. THE FORGED COMPONENT SHALL CONFIRM WITH THE DIMENSIONS AS SHOWN.
6. THE MOLTEN STEEL SHALL BE VACUUM TREATED, PRIOR TO OR DURING POURING OF THE INGOT TO REMOVE OBJECTIONABLE GASES, PARTICULARLY HYDROGEN.
7. THE MANUFACTURER HAS TO PROVIDE 2 SETS OF THE MATERIAL TEST REPORT CONTAINING THE FOLLOWING.
   a. PURCHASE ORDER NUMBER.
   b. FORGING IDENTIFICATION NUMBER.
   c. MATERIAL SPECIFICATION NUMBER INCLUDING DESIGNATION & DATA AS WELL AS THE GRADE, CLASS AND TYPE.
   d. HEAT NUMBER AND HEAT ANALYSIS.
   e. RESULTS OF THE MECHANICAL TESTS CONDUCTED BY THE MANUFACTURER FOR TENSION TEST, AND BRINELL HARDNESS TEST TO ENSURE THE MECHANICAL PROPERTIES AS SPECIFIED IN TABLE.
8. ALL TESTS FOR MECHANICAL PROPERTIES ARE TO BE CARRIED OUT AS PER ASTM A 370.
9. RESULTS OF THE ULTRASONIC FLAW DETECTION TEST AS PER ASTM ASTM A 388/A 388M–05.
10. EXTENT TO WHICH THE FORGING IS INCOMPLETE WITH RESPECT TO THE MATERIAL SPECIFICATIONS.
11. MILL TEST CERTIFICATE.
12. COMPONENT TO BE STAMPED BY THE MANUFACTURER WITH:–
    a. THE MANUFACTURER'S NAME OR TRADEMARK.
    b. MANUFACTURER'S SERIAL NUMBER.

CHEMICAL COMPOSITION TABLE

STEEL DESIGNATION	En24					
CHEMICAL COMPOSITION, %	C	Si	Mn	Ni	Cr	Mo
	0.35–0.45	0.1–0.35	0.4–0.7	1.25–1.75	0.9–1.3	0.2–0.35
Condition of material	Hardened and tempered					
Tensile strength kgf/mm^2	80–95					
Yield strength kgf/mm^2	60					

DO NOT SCALE THE DRAWING
ASK IF IN DOUBT
UNLESS OTHERWISE SHOWN
ALL DIMENSIONS ARE IN MILLIMETERS
REMOVE SHARP EDGES & BURRS
CHAMFER 1 M.M. X 45°
MACHINING FINISH IN MICRONS :–
▽ 8 – 25 ▽▽ 1.6 – 8
▽▽▽ 0.025 – 1.6 ▽▽▽▽ < 0.025

DEVIATION FOR NON TOLERANCED DIMENSIONS (IS –2102)

DIAMETERS & LENGTHS UPTO & INCL.	
6 –	+0.1
30 –	+0.2
120 –	+0.3
315 –	+0.5
1000 –	+0.8
2000 –	+1.2
4000 & ABOVE	+2.0
	+3.0

LENGTH IN M.M. OF SHORTER SIDE OF ANGLE UPTO & INCL.	
1– 6	± 1°–00'
6– 30	± 0°–30'
30–120	± 0°–20'
120–400	± 0°–10'

SPP

MATERIAL: REF En-24 Ø 205 x 2000
FINISH:
DRAWN: R.S
DRG.CHKD: C.P.K.
APPROVED: M.P.

TITLE: DUMB-BELL SHAFT (FORGED) VACUUM LID LIFTING

SATISH DHAWAN SPACE CENTRE
SOLID PROPELLANT PLANT
I.S.R.O SRIHARIKOTA

PROJECTION

SCALE	DRG. NO.	DATE	SHEET
1 : 3	626-105-00-007-A3-R0	05.08.11	OF

REF. DRG. NO.
COM. FILE NO.

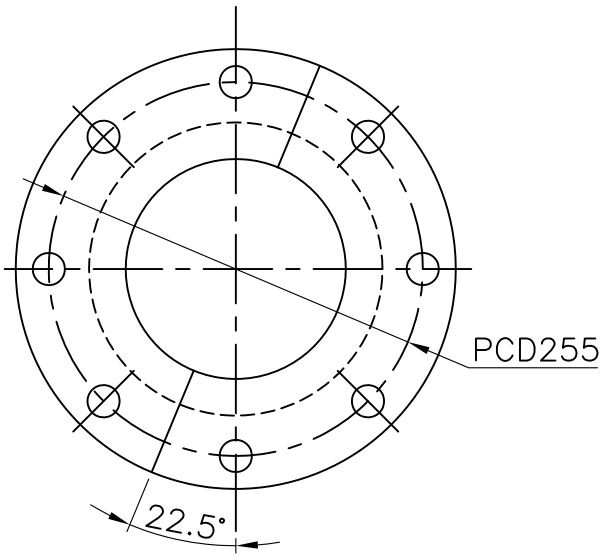

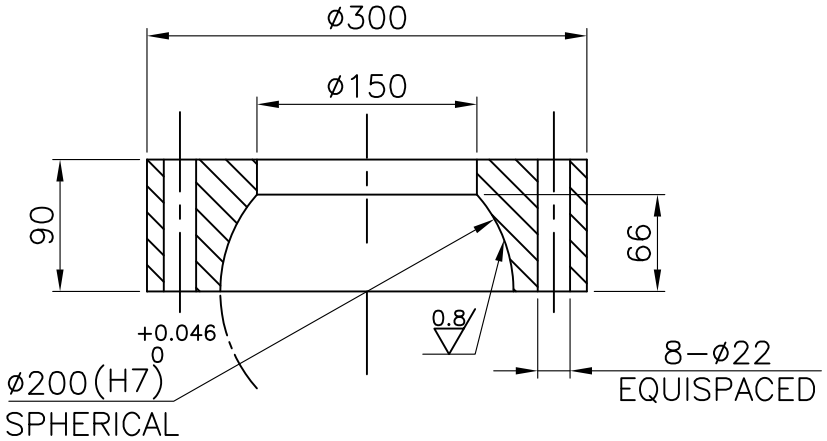

NOTES:

1. REMOVE ALL SHARP CORNERS AND BURRS.
2. TO BE HEAT TREATED & TEMPERED TO 30~35 HRC.
3. AFTER COMPLETION OF ALL MACHINING COMPONENT TO BE SLIT TO 2 PART BY WIRE CUTTING. COMPONENT TO BE MARKED & KEPT IN SAME PLACE.

DO NOT SCALE THE DRAWING
ASK IF IN DOUBT
UNLESS OTHERWISE SHOWN
ALL DIMENSIONS ARE IN MILLIMETERS
REMOVE SHARP EDGES & BURRS
CHAMFER 1 M.M. X 45°
MACHINING FINISH IN MICRONS :−
▽ 8 − 25 ▽▽ 1.6 − 8
▽▽▽ 0.025 − 1.6 ▽▽▽▽ < 0.025

DEVIATION FOR NON TOLERANCED DIMENSIONS (IS −2102)

DIAMETERS & LENGTHS	
UPTO & INCL. 6	+0.1
6 − 30	+0.2
30 − 120	+0.3
120 − 315	+0.5
315 − 1000	+0.8
1000 − 2000	+1.2
2000 − 4000	+2.0
4000 & ABOVE	+3.0

LENGTH IN M.M. OF SHORTER SIDE OF ANGLE UPTO & INCL.	
1− 6	± 1°−0′
6− 30	± 0°−30′
30−120	± 0°−20′
120−400	± 0°−10′

SPP

MATERIAL: ROD En - 24 Ø 305 x 100 LONG
FINISH: BLACKENING

DRAWN	R.S
DRG.CHKD	C.P.K.
APPROVED	M.P.

TITLE
LOWER CUP - A

SATISH DHAWAN SPACE CENTRE
SOLID PROPELLANT PLANT
I.S.R.O SRIHARIKOTA

SCALE	DRG. NO.	DATE	SHEET
1 : 5	626-105-00-008-A4-R0	05.08.11	OF

PROJECTION

REF. DRG. NO.
COM. FILE NO.

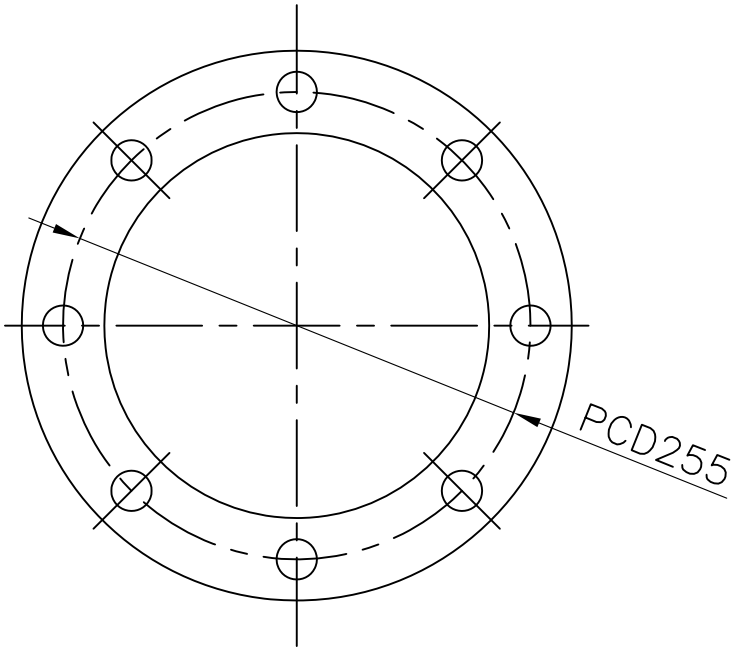

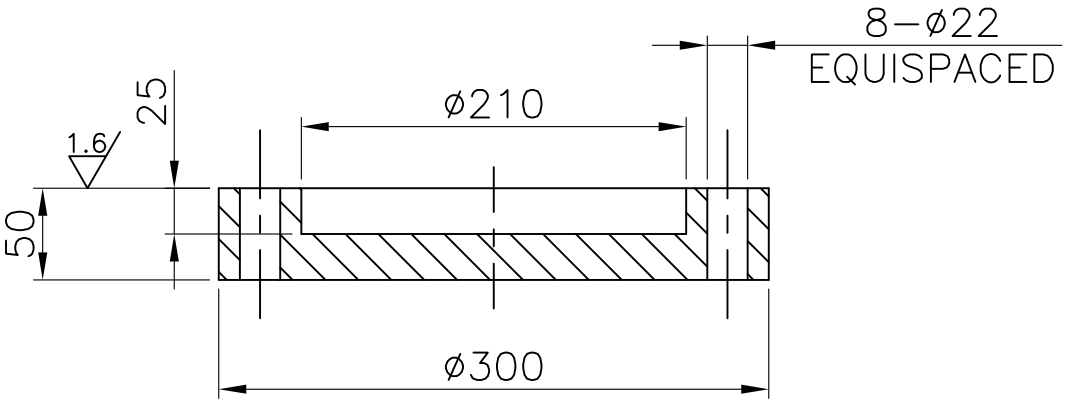

NOTES:

1. REMOVE ALL SHARP CORNERS AND BURRS.
2. TO BE HEAT TREATED & TEMPERED TO 30~35 HRC.

DO NOT SCALE THE DRAWING
ASK IF IN DOUBT
UNLESS OTHERWISE SHOWN
ALL DIMENSIONS ARE IN MILLIMETERS
REMOVE SHARP EDGES & BURRS
CHAMFER 1 M.M. X 45°
MACHINING FINISH IN MICRONS :–
▽ 8 – 25 ▽▽ 1.6 – 8
▽▽▽ 0.025 – 1.6 ▽▽▽▽ < 0.025

DEVIATION FOR NON TOLERANCED DIMENSIONS (IS –2102)

DIAMETERS & LENGTHS	
UPTO & INCL. 6	+0.1
6 – 30	+0.2
30 – 120	+0.3
120 – 315	+0.5
315 – 1000	+0.8
1000 – 2000	+1.2
2000 – 4000	+2.0
4000 & ABOVE	+3.0

LENGTH IN M.M. OF SHORTER SIDE OF ANGLE UPTO & INCL.	
1– 6	± 1°–0′
6– 30	± 0°–30′
30–120	± 0°–20′
120–400	± 0°–10′

SPP

MATERIAL: ROD En - 8 Ø 305 x 55 LONG
FINISH: BLACKNING
DRAWN: R.S
DRG.CHKD: C.P.K.
APPROVED: M.P.

TITLE: LOWER CUP - B

SATISH DHAWAN SPACE CENTRE
SOLID PROPELLANT PLANT
I.S.R.O SRIHARIKOTA

PROJECTION

SCALE	DRG. NO.	DATE	SHEET
1 : 4	626-105-00-009-A4-R0	05.08.11	OF

REF. DRG. NO.

COM. FILE NO.

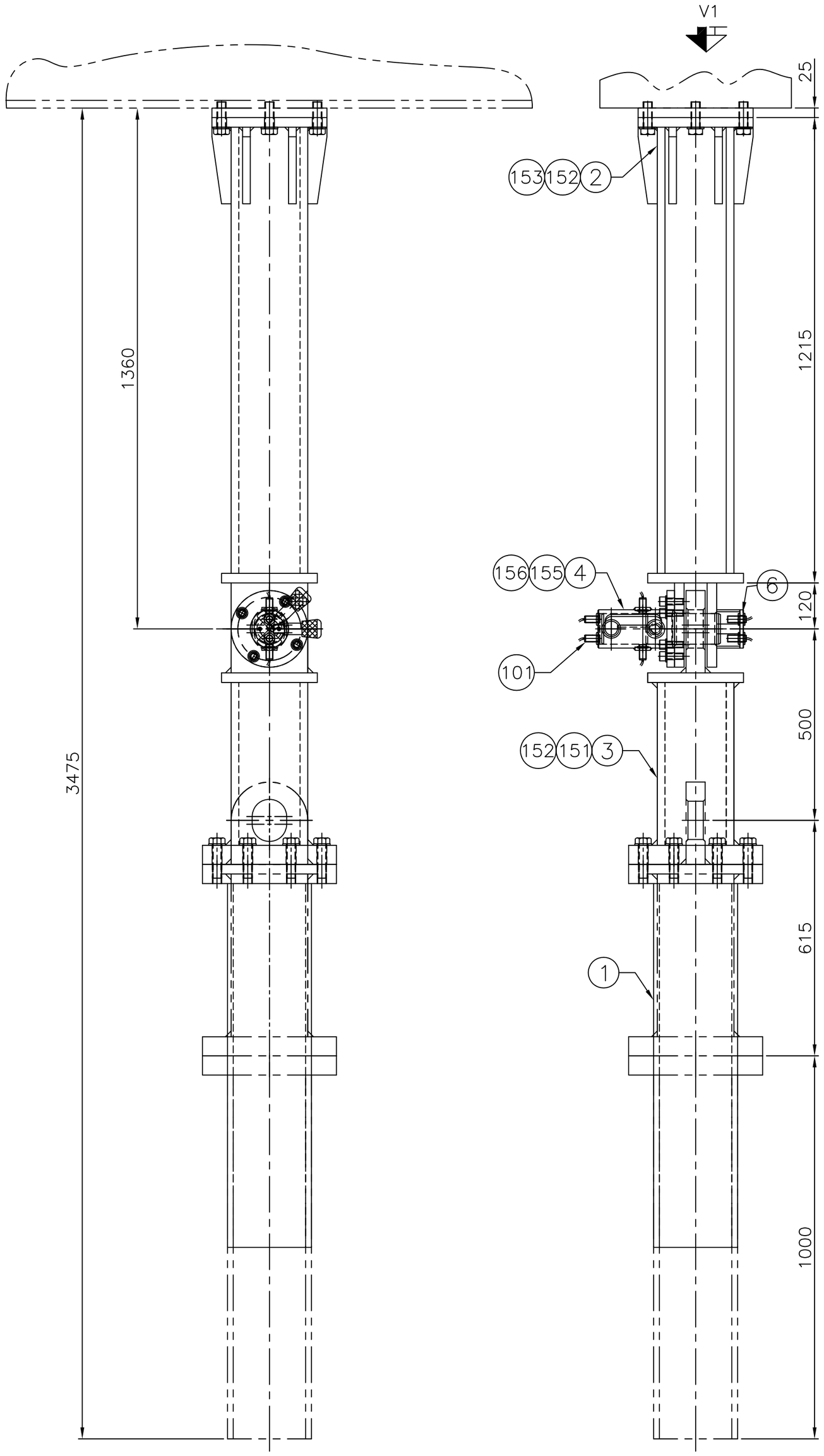

> Drawing is for One Assembly. Four such assemblies are required.
> Part No 1 is shown for reference and need not be supplied.

PART NO.	DESCRIPTION	MATERIAL	SPECIFICATION	QTY.
1	VACUUM LID LOCKING LEG SUPPORT			
2	UPPER STRUCTURE	REFER DWG.	626-106-00-003-A3-R0	01
3	LOWER STRUCTURE	REFER DWG.	626-106-00-004-A3-R0	01
4	LOCK BODY	REFER DWG.	626-106-00-005-A3-R0	01
5	HANDLE	REFER DWG.	626-106-00-007-A3-R0	01
6	SENSOR MOUNTING BRACKET	REFER DWG.	626-106-00-006-A4-R0	01
101	SENSOR	PEPPERL+FUCHS	NCB5-18GMM40-N0	04
151	HEX. HEAD SCREW	IS:1363-1967	M24x95	08
152	PLAIN WASHER	IS:5370-1969	M24	16
153	HEX. HEAD SCREW	IS:1363-1967	M24x70	08
155	HEX. SOC. HEAD CAP SCREW	IS:1363-1967	M16x45	04
156	PLAIN WASHER	IS:5370-1969	M16	04

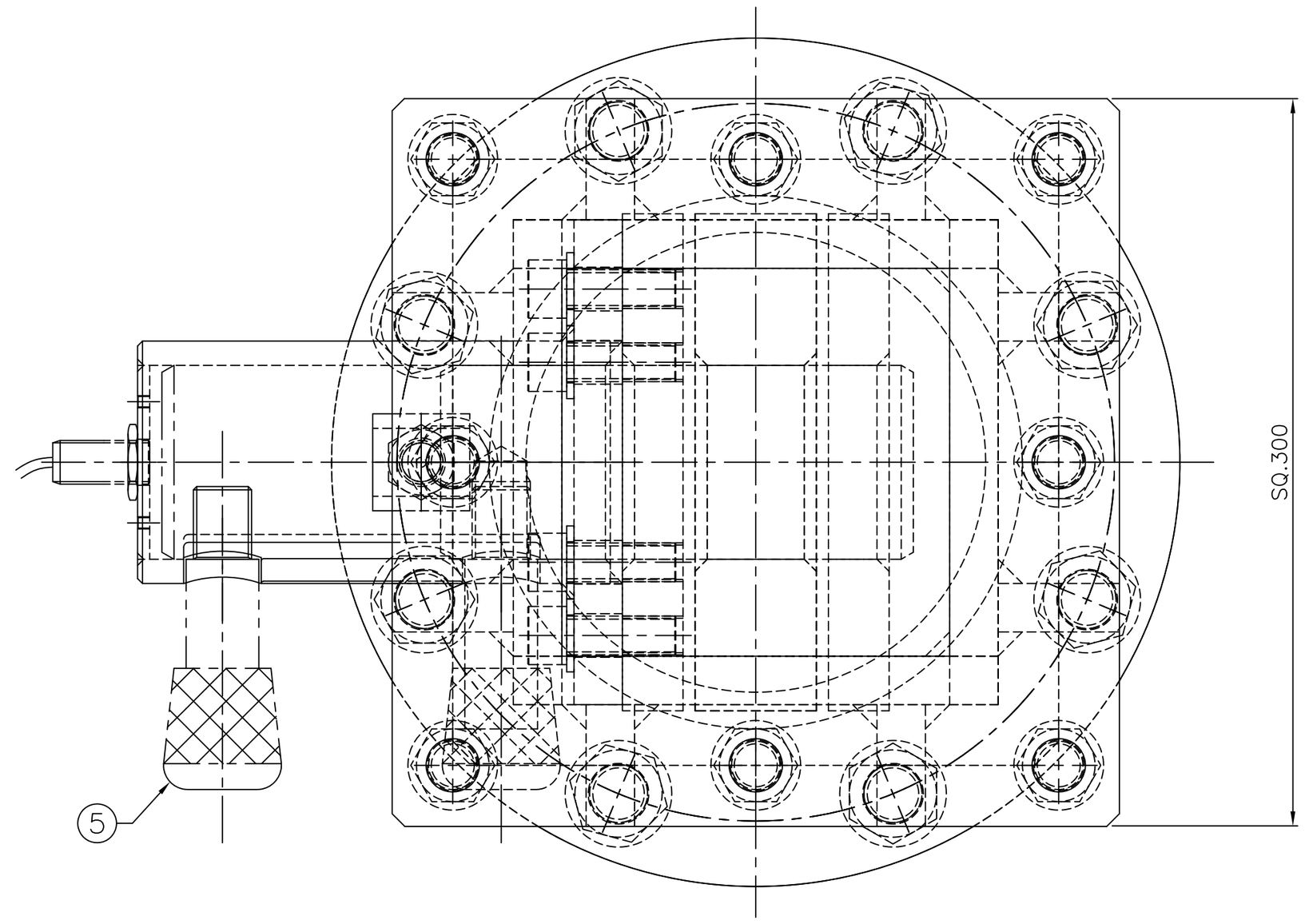

VIEW V1
SCALE 1:2

DO NOT SCALE THE DRAWING
ASK IF IN DOUBT
UNLESS OTHERWISE SHOWN
ALL DIMENSIONS ARE IN MILLIMETERS
REMOVE SHARP EDGES & BURRS
CHAMFER 1 M.M. X 45°
MACHINING FINISH IN MICRONS :-
▽ 8 – 25 ▽▽ 1.6 – 8
▽▽▽ 0.025 – 1.6 ▽▽▽▽ < 0.025

DEVIATION FOR NON TOLERANCED DIMENSIONS (IS -2102)

DIAMETERS & LENGTHS	
UPTO & INCL. 6	+0.1
6 – 30	+0.2
30 – 120	+0.3
120 – 315	+0.5
315 – 1000	+0.8
1000 – 2000	+1.2
2000 – 4000	+2.0
4000 & ABOVE	+3.0

LENGTH IN M.M. OF SHORTER SIDE OF ANGLE UPTO & INCL.	
1– 6	± 1°–00'
6– 30	± 0°–30'
30–120	± 0°–20'
120–400	± 0°–10'

SPP

MATERIAL: REF BOM
FINISH:
DRAWN: R.S
DRG.CHKD: C.P.K
APPROVED: M.P

TITLE: VACUUM LID LOCKING ASSEMBLY

SATISH DHAWAN SPACE CENTRE
SOLID PROPELLANT PLANT
I.S.R.O SRIHARIKOTA

PROJECTION

SCALE: 1 : 10
DRG. NO.: 626-106-00-001-A2-R0
DATE: 05.08.11
SHEET
OF

PART NO.	DESCRIPTION	MATERIAL	SPECIFICATION	QTY.
1	PLATE	IS:2062 Gr–B	305x305x32THK	01
2	PLATE	IS:2062 Gr–B	1170x205x20THK	02
3	PLATE	IS:2062 Gr–B	1170x165x20THK	02
4	PLATE	IS:2062 Gr–B	255x255x25THK	01
5	PLATE	IS:2062 Gr–B	225x205x25THK	02
6	PLATE	IS:2062 Gr–B	205x50x20THK	08

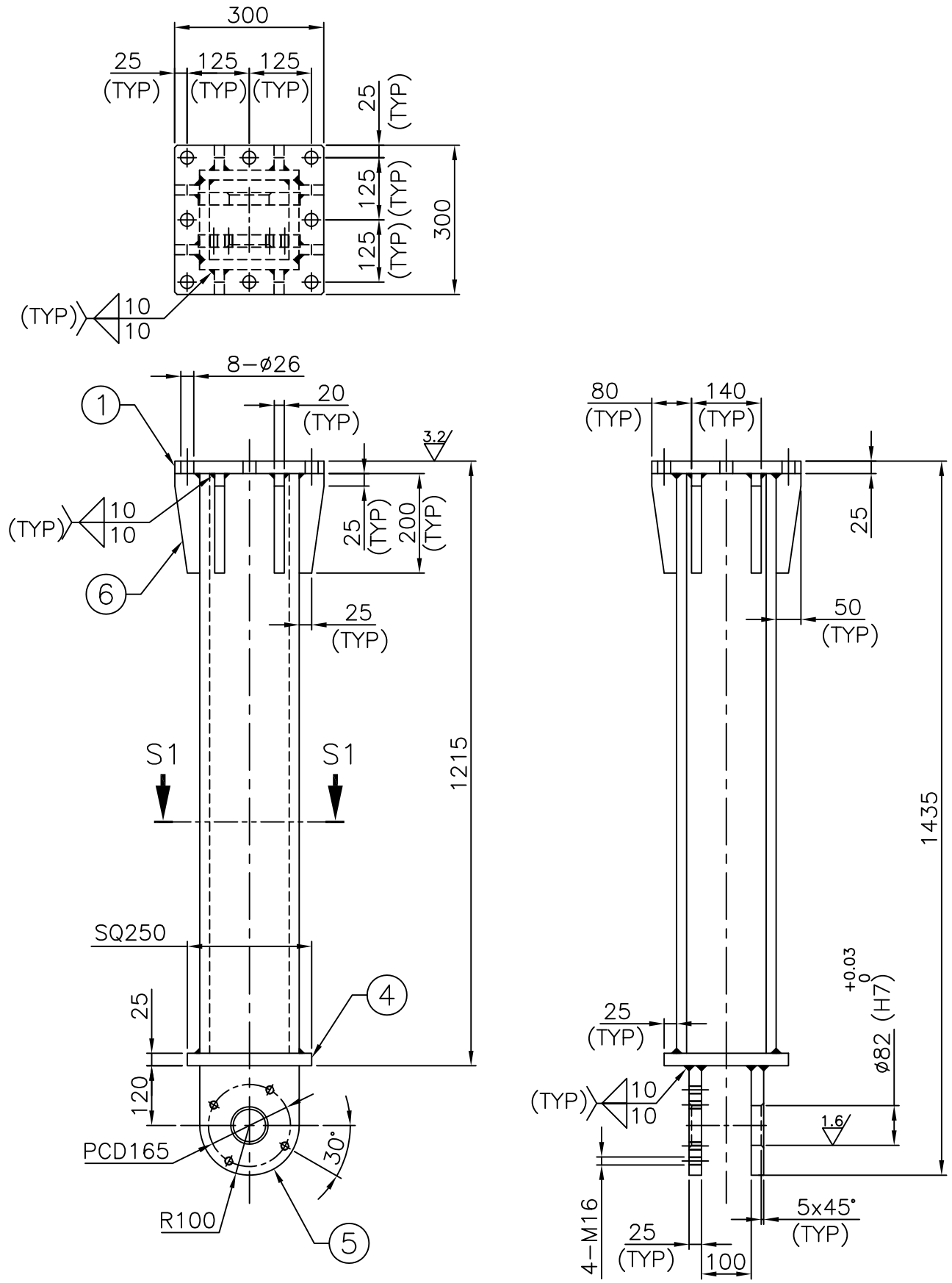

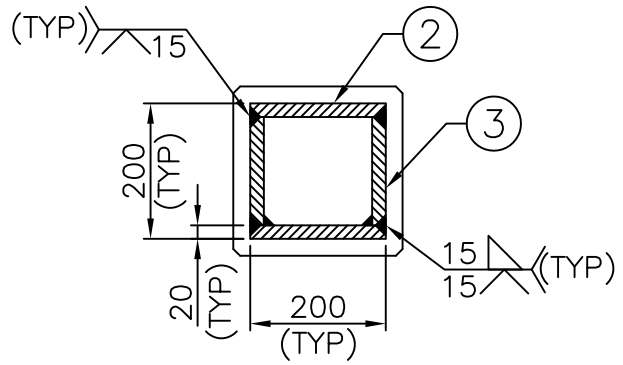

SECTION S1–S1

SCALE 1:2

NOTES:

1. REMOVE ALL SHARP CORNERS AND BURRS.
2. STRUCTURAL WELDS SHALL BE OF FULL PENETRATION WELDS..

DO NOT SCALE THE DRAWING
ASK IF IN DOUBT
UNLESS OTHERWISE SHOWN
ALL DIMENSIONS ARE IN MILLIMETERS
REMOVE SHARP EDGES & BURRS
CHAMFER 1 M.M. X 45°
MACHINING FINISH IN MICRONS :–
▽ 8 – 25 ▽▽ 1.6 – 8
▽▽▽ 0.025 – 1.6 ▽▽▽▽ < 0.025

DEVIATION FOR NON TOLERANCED DIMENSIONS (IS –2102)

DIAMETERS & LENGTHS	
UPTO & INCL. 6	+0.1
6 – 30	+0.2
30 – 120	+0.3
120 – 315	+0.5
315 – 1000	+0.8
1000 – 2000	+1.2
2000 – 4000	+2.0
4000 & ABOVE	+3.0

LENGTH IN M.M. OF SHORTER SIDE OF ANGLE UPTO & INCL.	
1– 6	± 1°–0'
6– 30	± 0°–30'
30–120	± 0°–20'
120–400	± 0°–10'

SPP

MATERIAL:	REF BOM
FINISH:	PAINTING
DRAWN	R.S
DRG.CHKD	C.P.K.
APPROVED	M.P.

TITLE

UPPER STRUCTURE
VACUUM LID LOCKING

SATISH DHAWAN SPACE CENTRE
SOLID PROPELLANT PLANT
I.S.R.O SRIHARIKOTA

PROJECTION

SCALE	DRG. NO.	DATE	SHEET
1 : 11	626-106-00-003-A3-R0	05.08.11	OF

REF. DRG. NO.
COM. FILE NO.

PART NO.	DESCRIPTION	MATERIAL	SPECIFICATION	QTY.
1	ROUND	IS:2062 Gr–B	ø355x55THK	01
2	PLATE	IS:2062 Gr–B	430x205x20THK	02
3	PLATE	IS:2062 Gr–B	430x185x20THK	02
4	PLATE	IS:2062 Gr–B	255x255x25THK	01
5	PLATE	IS:2062 Gr–B	220x205x50THK	01

NOTES:

1. REMOVE ALL SHARP CORNERS AND BURRS.
2. STRUCTURAL WELDS SHALL BE OF FULL PENETRATION WELDS..

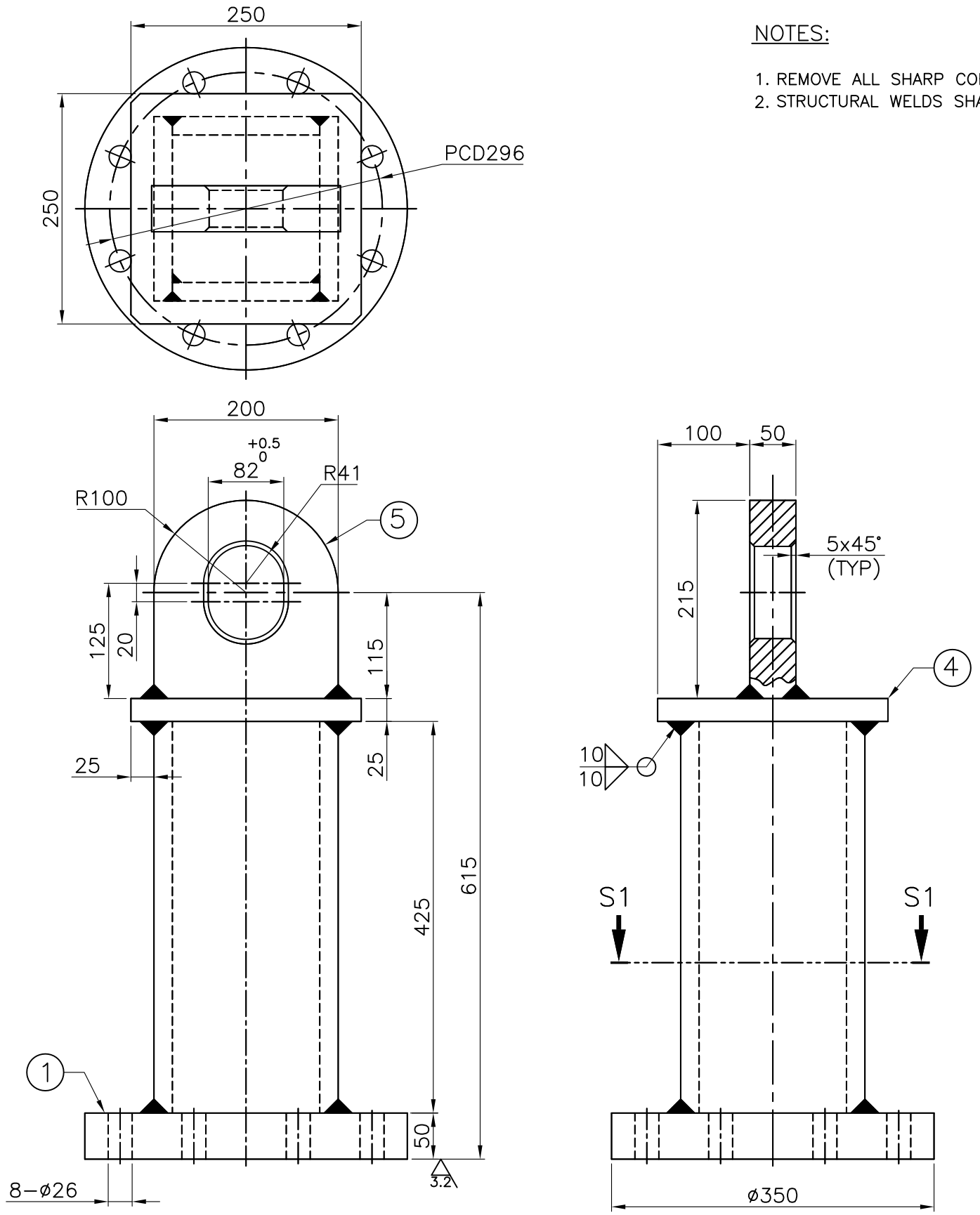

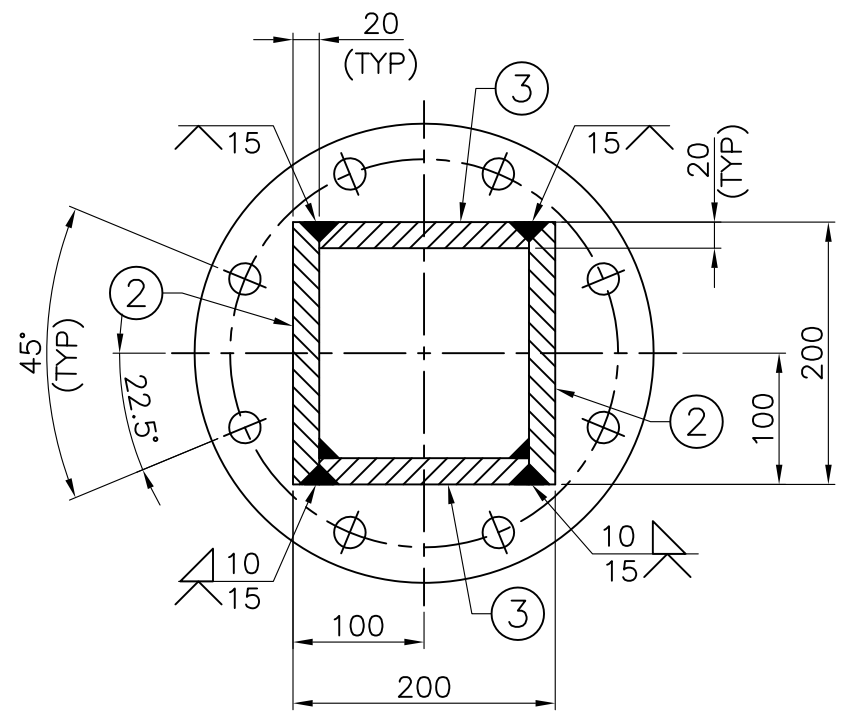

SECTION S1–S1

DO NOT SCALE THE DRAWING
ASK IF IN DOUBT
UNLESS OTHERWISE SHOWN
ALL DIMENSIONS ARE IN MILLIMETERS
REMOVE SHARP EDGES & BURRS
CHAMFER 1 M.M. X 45°
MACHINING FINISH IN MICRONS :–
▽ 8 – 25 ▽▽ 1.6 – 8
▽▽▽ 0.025 – 1.6 ▽▽▽▽ < 0.025

DEVIATION FOR NON TOLERANCED DIMENSIONS (IS –2102)

DIAMETERS & LENGTHS		LENGTH IN M.M. OF SHORTER SIDE OF ANGLE UPTO & INCL.
UPTO & INCL. 6	+0.1	
6 – 30	+0.2	
30 – 120	+0.3	
120 – 315	+0.5	1– 6 ± 1°–0′
315 – 1000	+0.8	6– 30 ± 0°–30′
1000 – 2000	+1.2	30–120 ± 0°–20′
2000 – 4000	+2.0	120–400 ± 0°–10′
4000 & ABOVE	+3.0	

SPP

MATERIAL:	REF BOM
FINISH:	PAINTING
DRAWN	R.S
DRG.CHKD	C.P.K.
APPROVED	M.P.

TITLE

LOWER STRUCTURE VACUUM LID LOCKING

SATISH DHAWAN SPACE CENTRE
SOLID PROPELLANT PLANT
I.S.R.O SRIHARIKOTA

PROJECTION

SCALE	DRG. NO.	DATE	SHEET
1 : 5	626-106-00-004-A3-R0	05.08.11	OF

REF. DRG. NO.
COM. FILE NO.

SL NO.	BORE DIA	SHAFT DIA
1	80 $^{+0.035}_{0}$ (H7)	80 $^{-0.036}_{-0.071}$ (f7)

PART NO.	DESCRIPTION	MATERIAL	SPECIFICATION	QTY.
1	PIPE	IS:2062 Gr. B	3–½ PIPE OD:101.6 WT:16.15 L:200	01
2	FLANGE	IS:2062 Gr. B	OD:210 x 25THK	01
3	PLATE	IS:2062 Gr. B	ø80 x 5THK	01

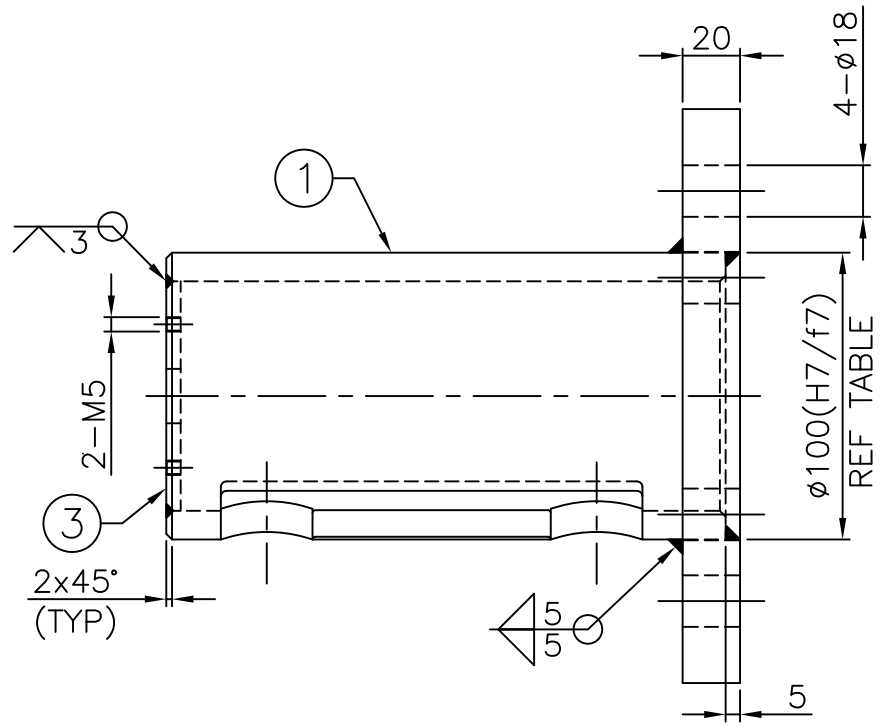

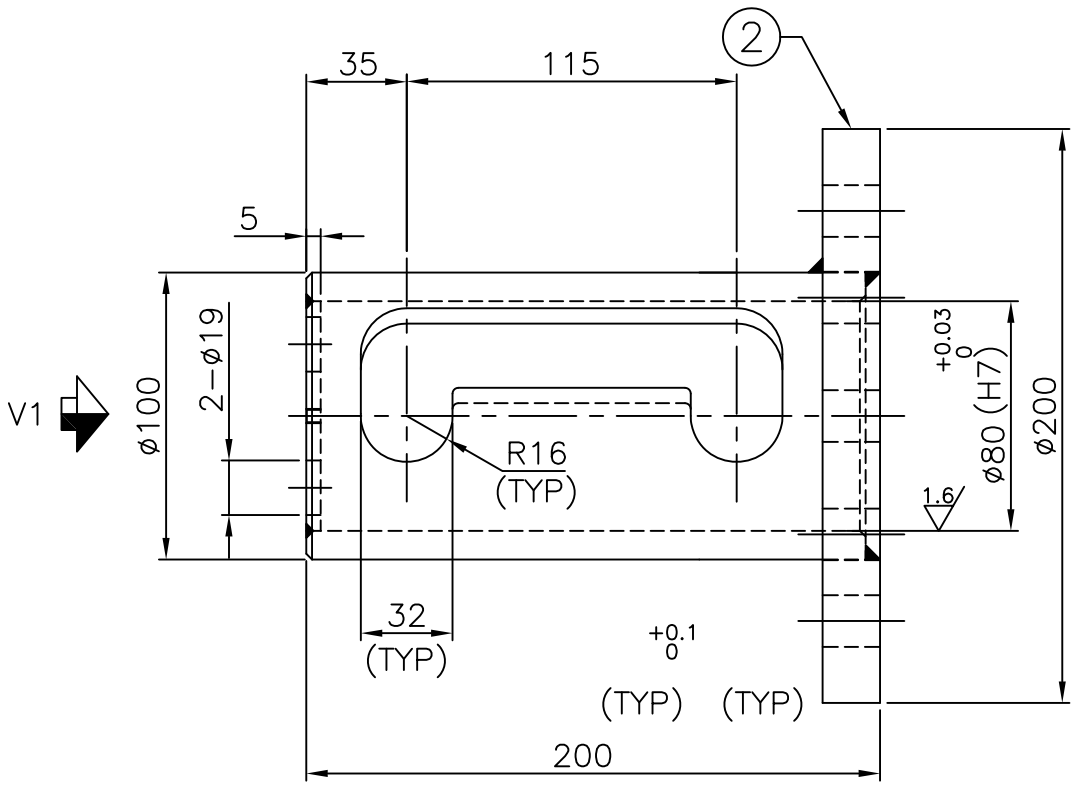

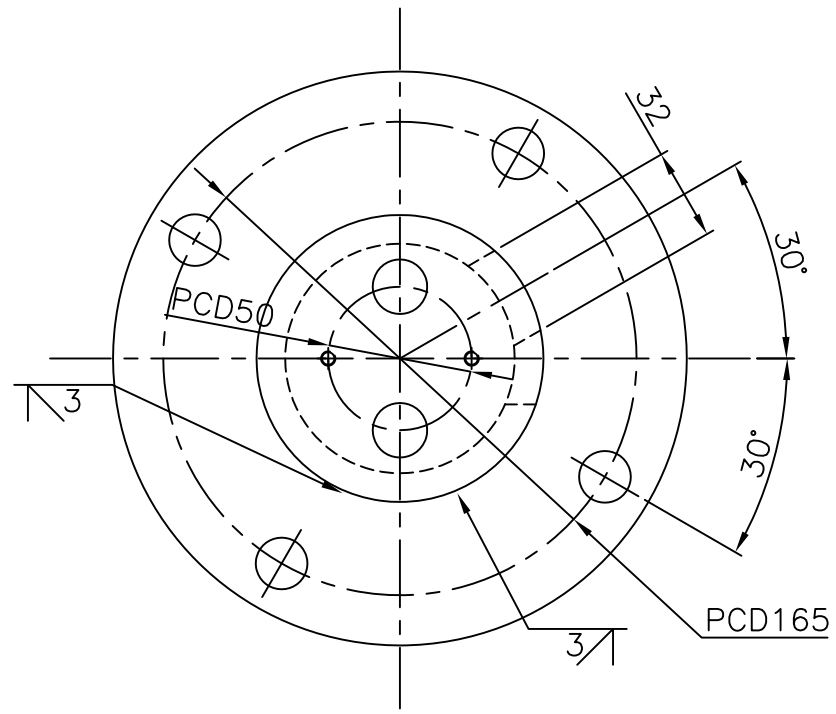

VIEW V1

NOTES:

1. REMOVE ALL SHARP CORNERS AND BURRS.
2. MASK ALL THE HOLES & MACHINED SURFACES BEFORE PAINTING.
3. STRUCTURAL WELDS SHALL BE OF FULL PENETRATION WELDS.

DO NOT SCALE THE DRAWING
ASK IF IN DOUBT
UNLESS OTHERWISE SHOWN
ALL DIMENSIONS ARE IN MILLIMETERS
REMOVE SHARP EDGES & BURRS
CHAMFER 1 M.M. X 45°
MACHINING FINISH IN MICRONS :–
▽ 8 – 25 ▽▽ 1.6 – 8
▽▽▽ 0.025 – 1.6 ▽▽▽▽ < 0.025

DEVIATION FOR NON TOLERANCED DIMENSIONS (IS –2102)

DIAMETERS & LENGTHS		LENGTH IN M.M. OF SHORTER SIDE OF ANGLE UPTO & INCL.	
UPTO & INCL. 6	+0.1	1– 6	± 1°–0'
6 – 30	+0.2	6– 30	± 0°–30'
30 – 120	+0.3	30–120	± 0°–20'
120 – 315	+0.5	120–400	± 0°–10'
315 – 1000	+0.8		
1000 – 2000	+1.2		
2000 – 4000	+2.0		
4000 & ABOVE	+3.0		

SPP

MATERIAL:	REF BOM
FINISH:	BLACKENING
DRAWN	R.S
DRG.CHKD	C.P.K.
APPROVED	M.P.

TITLE: LOCK BODY
VACUUM LID LOCKING

SATISH DHAWAN SPACE CENTRE
SOLID PROPELLANT PLANT
I.S.R.O SRIHARIKOTA

PROJECTION

SCALE	DRG. NO.	DATE	SHEET
1 : 2.5	626-106-00-005-A3-R0	05.08.11	OF

REF. DRG. NO.
COM. FILE NO.

REF. DRG. NO.
COM. FILE NO.

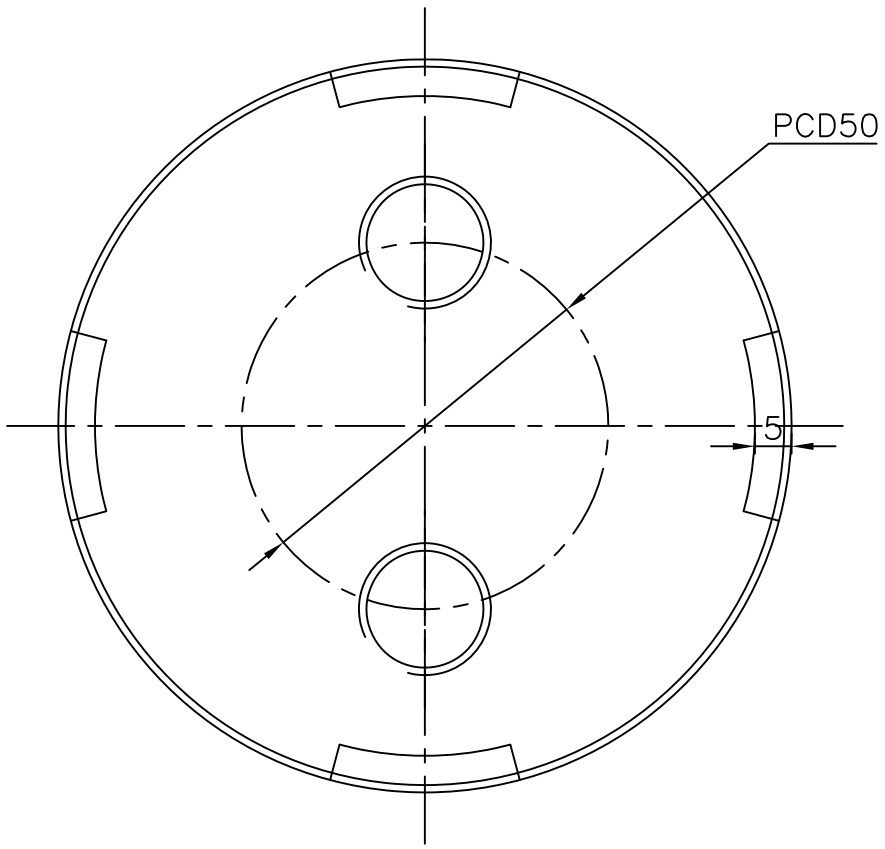

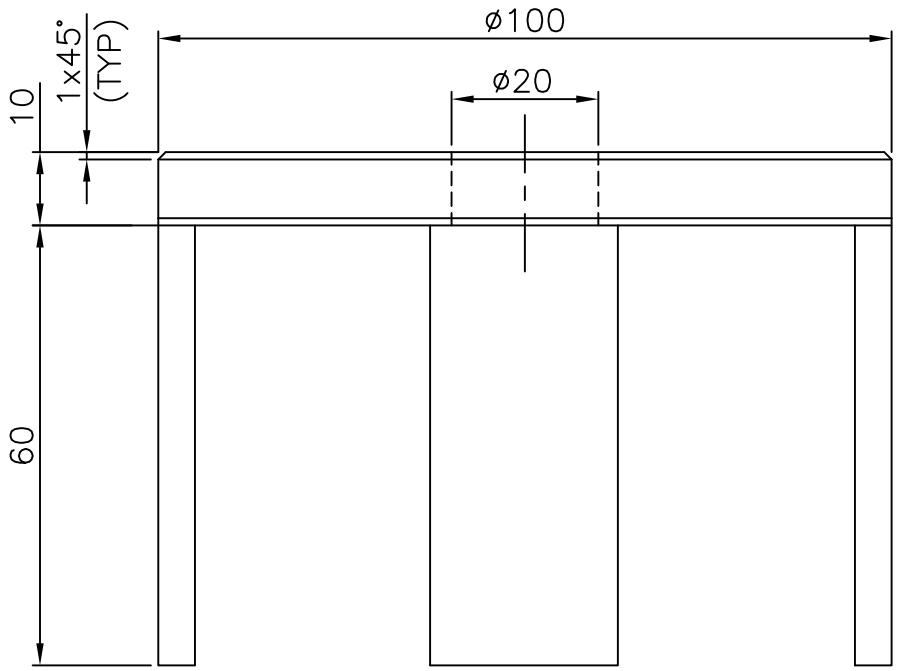

NOTES:

1. REMOVE ALL SHARP CORNERS AND BURRS.

DO NOT SCALE THE DRAWING
ASK IF IN DOUBT
UNLESS OTHERWISE SHOWN
ALL DIMENSIONS ARE IN MILLIMETERS
REMOVE SHARP EDGES & BURRS
CHAMFER 1 M.M. X 45°
MACHINING FINISH IN MICRONS :-
▽ 8 – 25 ▽▽ 1.6 – 8
▽▽▽ 0.025 – 1.6 ▽▽▽▽ < 0.025

DEVIATION FOR NON TOLERANCED DIMENSIONS (IS –2102)

DIAMETERS & LENGTHS	
UPTO & INCL. 6	+0.1
6 – 30	+0.2
30 – 120	+0.3
120 – 315	+0.5
315 – 1000	+0.8
1000 – 2000	+1.2
2000 – 4000	+2.0
4000 & ABOVE	+3.0

LENGTH IN M.M. OF SHORTER SIDE OF ANGLE UPTO & INCL.	
1– 6	± 1°–0'
6– 30	± 0°–30'
30–120	± 0°–20'
120–400	± 0°–10'

SPP

MATERIAL:	IS:2062 Gr.-B Ø 110 x 16
FINISH:	PAINTING
DRAWN	R.S
DRG.CHKD	C.P.K.
APPROVED	M.P.

TITLE: SENSOR MOUNTING BRACKET

SATISH DHAWAN SPACE CENTRE
SOLID PROPELLANT PLANT
I.S.R.O SRIHARIKOTA

SCALE	DRG. NO.	DATE	SHEET
1 : 1	626-106-00-006-A4-R0	05.08.11	OF

PROJECTION

PART NO.	DESCRIPTION	MATERIAL	SPECIFICATION	QTY.
1	ROD	IS 2062 Gr. B	ø85x200L	01
2	HANDLE	IS 2062 Gr. B	ø35x110L	01
3	BAKELITE KNOB	BAKELITE	ø40xø50x55L	01

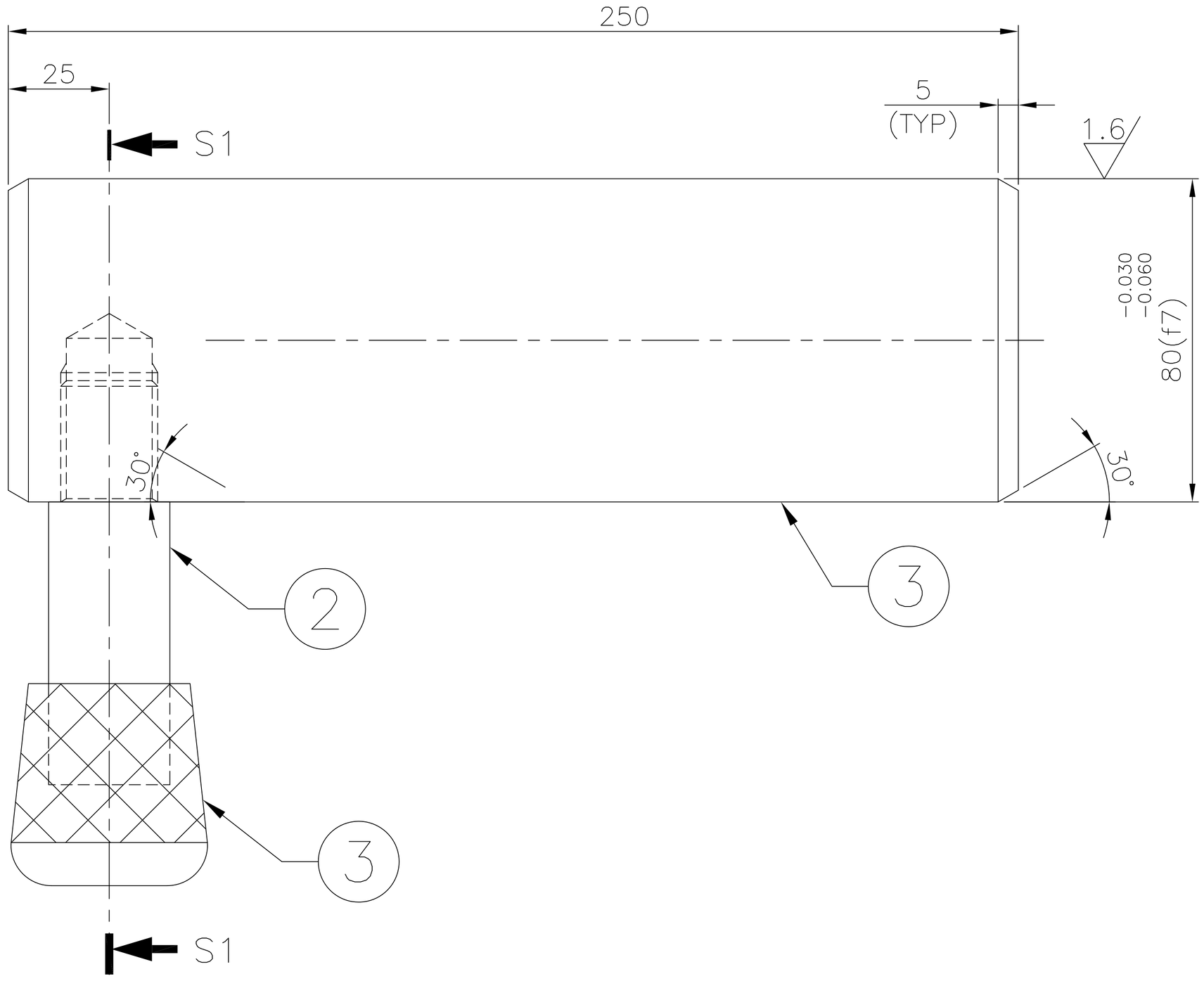

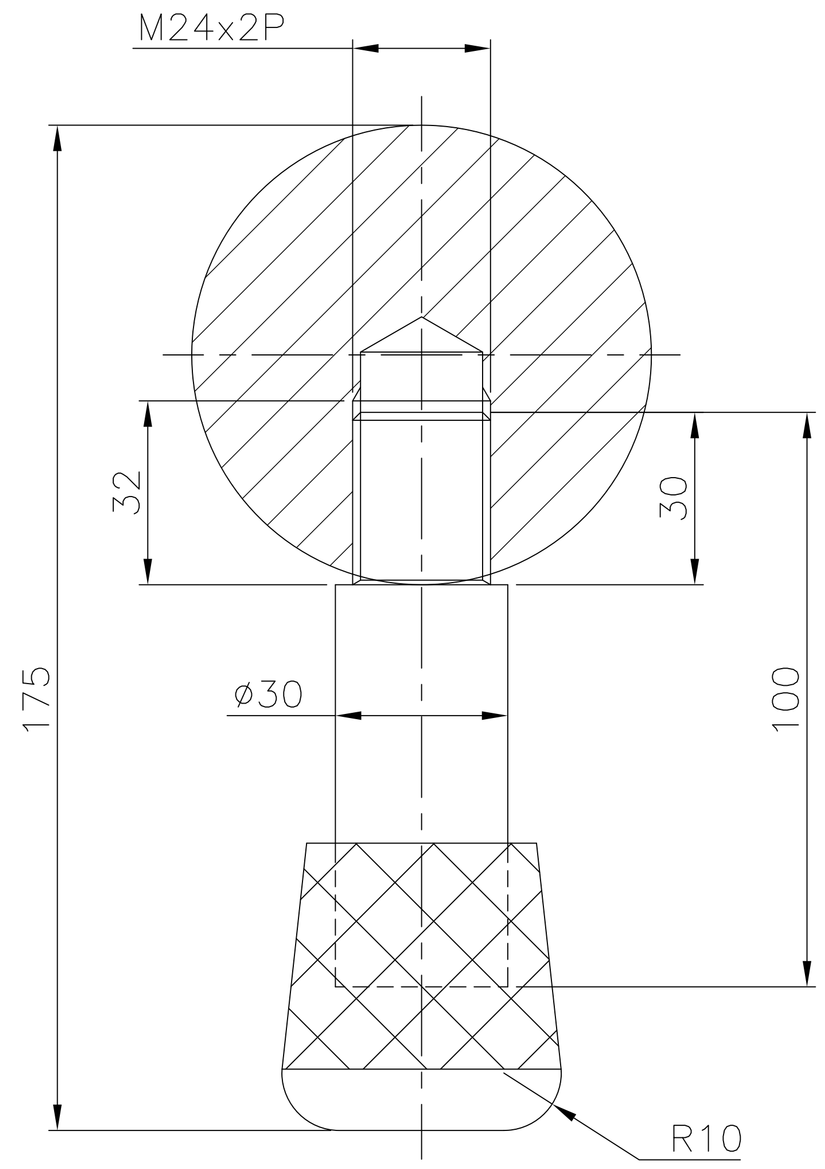

SECTION S1–S1

NOTES:

1. REMOVE ALL SHARP CORNERS AND BURRS.
2. COVER ALL TAPPED HOLES DURING PAINTING
3. PAINTING SHALL BE DONE AS PER THE TENDER.

DO NOT SCALE THE DRAWING
ASK IF IN DOUBT
UNLESS OTHERWISE SHOWN
ALL DIMENSIONS ARE IN MILLIMETERS
REMOVE SHARP EDGES & BURRS
CHAMFER 1 M.M. X 45°
MACHINING FINISH IN MICRONS :–
▽ 8 – 25 ▽▽ 1.6 – 8
▽▽▽ 0.025 – 1.6 ▽▽▽▽ < 0.025

DEVIATION FOR NON TOLERANCED DIMENSIONS (IS –2102)

DIAMETERS & LENGTHS	
UPTO & INCL. 6	+0.1
6 – 30	+0.2
30 – 120	+0.3
120 – 315	+0.5
315 – 1000	+0.8
1000 – 2000	+1.2
2000 – 4000	+2.0
4000 & ABOVE	+3.0

LENGTH IN M.M. OF SHORTER SIDE OF ANGLE UPTO & INCL.	
1– 6	± 1°–00'
6– 30	± 0°–30'
30–120	± 0°–20'
120–400	± 0°–10'

SPP

MATERIAL:	REF BOM
FINISH:	PAINTING
DRAWN	R.S
DRG.CHKD	C.P.K.
APPROVED	M.P.

TITLE: HANDLE

SATISH DHAWAN SPACE CENTRE
SOLID PROPELLANT PLANT
I.S.R.O SRIHARIKOTA

PROJECTION

SCALE	DRG. NO.	DATE	SHEET
1 : 1.5	626-106-00-007-A3-R0	05.08.11	OF

REF. DRG. NO.
COM. FILE NO.

REF. DRG. NO.

COM. FILE NO.

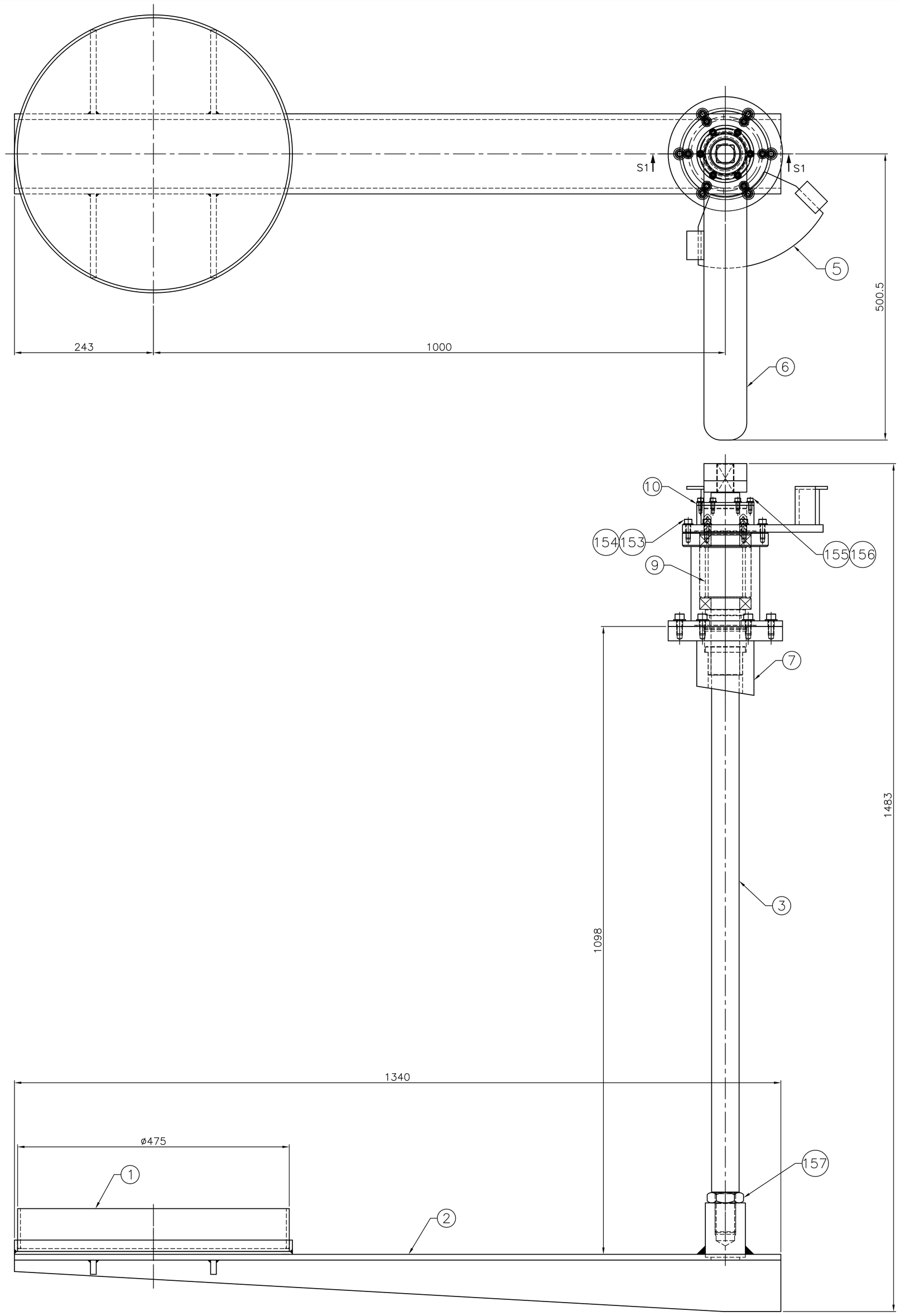

PART NO.	DESCRIPTION	MATERIAL	SPECIFICATION	QTY.
1	TRAY	REF DWG.	626-107-00-002-A3-R0	01
2	ARM	REF DWG.	626-107-00-003-A3-R0	01
3	SHAFT	REF DWG.	626-107-00-004-A3-R0	01
4	BEARING HOUSING	REF DWG.	626-107-00-005-A3-R0	01
5	STOPPER	REF DWG.	626-107-00-006-A3-R0	01
6	LEVER	REF DWG.	626-107-00-007-A4-R0	01
7	SEAL HOUSING	REF DWG.	626-107-00-008-A3-R0	01
8	BUSH	REF DWG.	626-107-00-009-A4-R0	01
9	SPACER	REF DWG.	626-107-00-010-A4-R0	01
10	SEAL COVER	REF DWG.	626-107-00-011-A4-R0	01
101	DG. BALL BEARING	SKF	6210 2RS	02
102	VEE SEAL	CHEVRON-SEAL	FABRIC-HINGE TYPE XE	04
103	'O' RING	STD	ID:100, CROSS SECTION-ø3	02
151	HEX. SOC. HEAD CAP SCREW	IS:1363-1967	M10 x 25	06
152	PLAIN WASHER	IS:5370-1969	M10	06
153	HEX. SOC. HEAD CAP SCREW	IS:1363-1967	M8 x 25	06
154	PLAIN WASHER	IS:5370-1969	M8	06
155	HEX. SOC. HEAD CAP SCREW	IS:1363-1967	M6 x 14	06
156	PLAIN WASHER	IS:5370-1969	M6	06
157	HEX. LOCK NUT	IS:1364-1967	M36	01

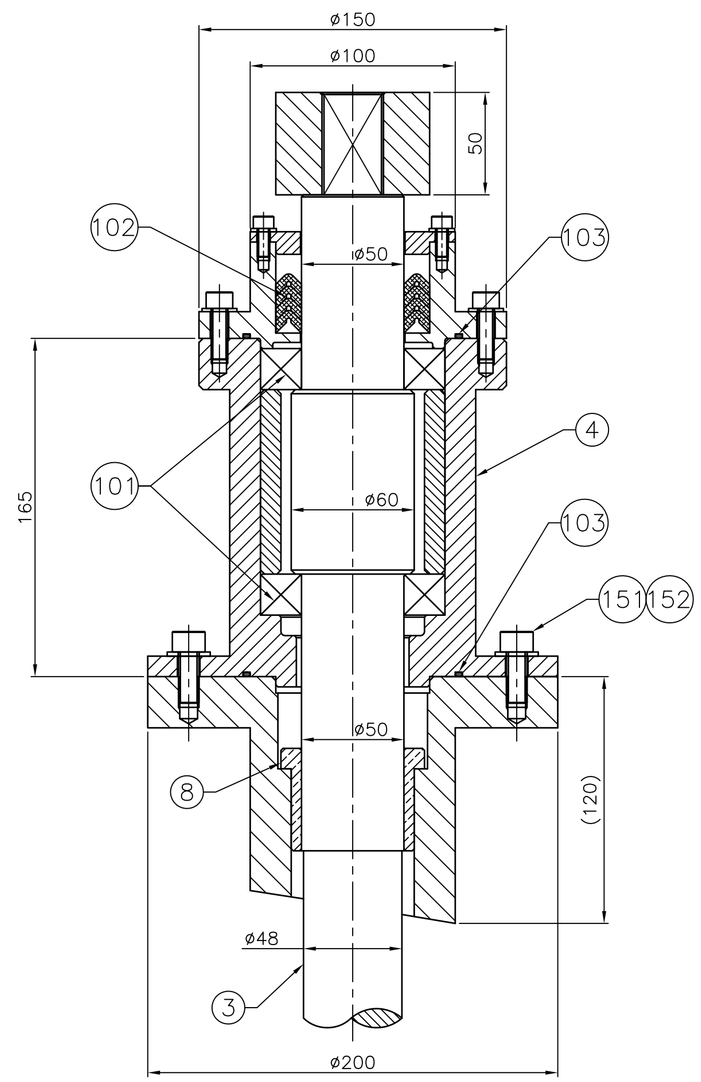

SECTION S1-S1

SCALE 1:2

DO NOT SCALE THE DRAWING
ASK IF IN DOUBT
UNLESS OTHERWISE SHOWN
ALL DIMENSIONS ARE IN MILLIMETERS
REMOVE SHARP EDGES & BURRS
CHAMFER 1 M.M. X 45°
MACHINING FINISH IN MICRONS :-
▽ 8 – 25 ▽▽ 1.6 – 8
▽▽▽ 0.025 – 1.6 ▽▽▽▽ < 0.025

DEVIATION FOR NON TOLERANCED DIMENSIONS (IS -2102)

DIAMETERS & LENGTHS	
UPTO & INCL. 6	+0.1
6 – 30	+0.2
30 – 120	+0.3
120 – 315	+0.5
315 – 1000	+0.8
1000 – 2000	+1.2
2000 – 4000	+2.0
4000 & ABOVE	+3.0

LENGTH IN M.M. OF SHORTER SIDE OF ANGLE UPTO & INCL.	
1– 6	± 1°–00'
6– 30	± 0°–30'
30–120	± 0°–20'
120–400	± 0°–10'

SPP

TITLE: DRIP COLLECTION ASSEMBLY

MATERIAL: REF BOM

FINISH:

DRAWN: R.S

DRG.CHKD: C.P.K.

APPROVED: M.P.

SATISH DHAWAN SPACE CENTRE
SOLID PROPELLANT PLANT
I.S.R.O SRIHARIKOTA

PROJECTION

SCALE	DRG. NO.	DATE	SHEET
1 : 4	626-107-00-001-A1-R0	05.08.11	OF

PART NO.	DESCRIPTION	MATERIAL	SPECIFICATION	QTY.
1	TUBE	ALUMINUM	ID:465, OD:475, L:75	01
2	PLATE	ALMUNIUM	ø480 x 5	01

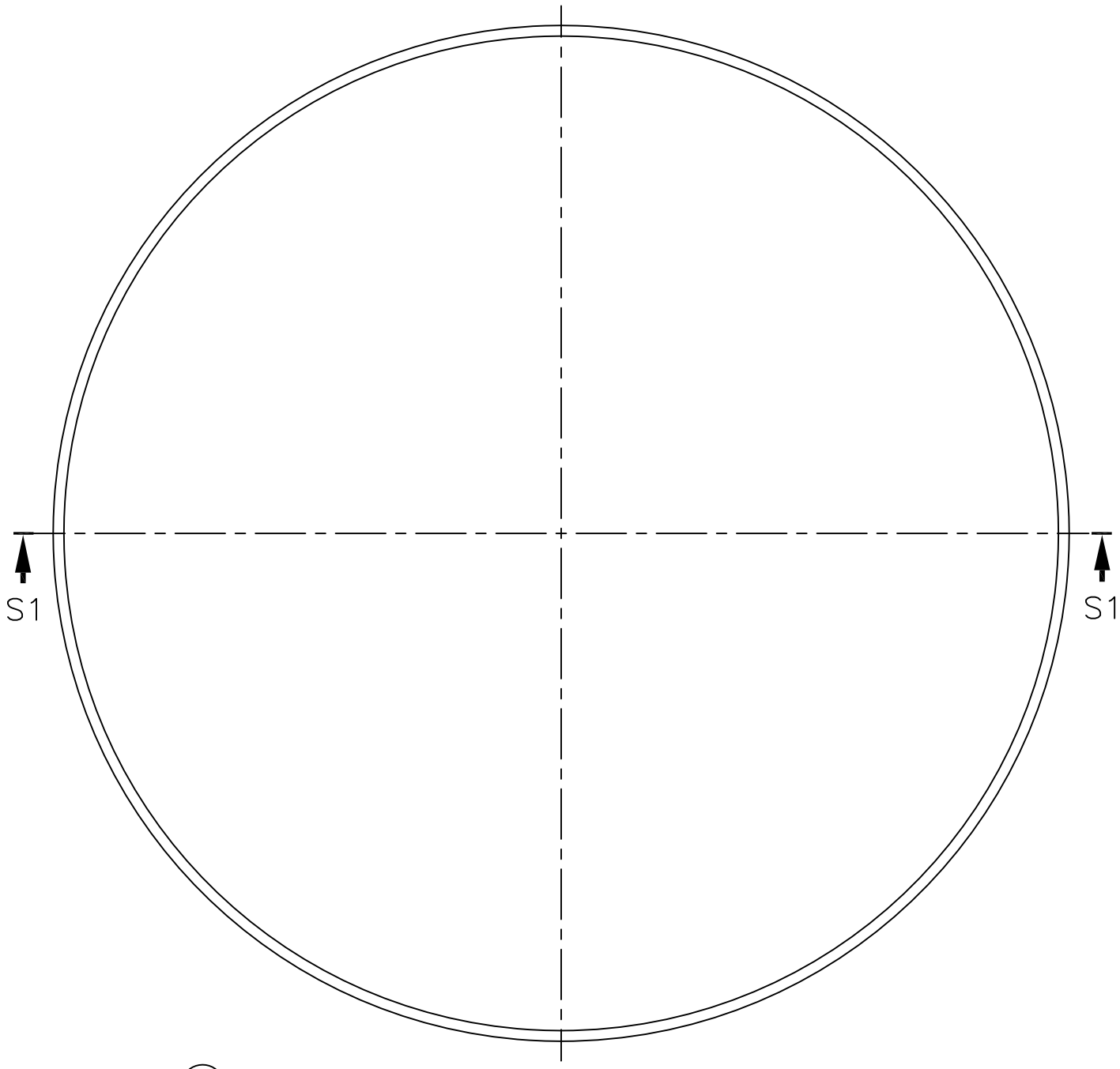

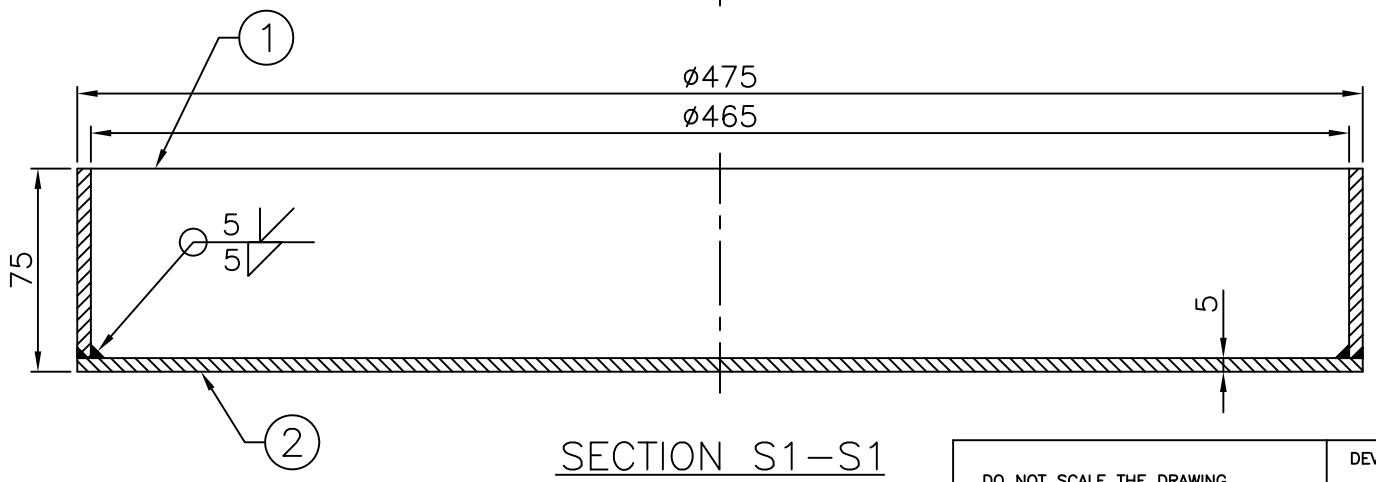

SECTION S1–S1

NOTES:

1. MATERIAL : REFER BOM
2. TO BE A WELDED CONSTRUCTION.
3. REMOVE ALL SHARP CORNERS AND BURRS.
4. REFER. TENDER DOCUMENT FOR ALL WELDING SPECIFICATION. ALL WELDING SHALL BE STRICTLY AS PER THE ABOVE MENTIONED SPECIFICTION NO. DOCUMENT.

DO NOT SCALE THE DRAWING
ASK IF IN DOUBT
UNLESS OTHERWISE SHOWN
ALL DIMENSIONS ARE IN MILLIMETERS
REMOVE SHARP EDGES & BURRS
CHAMFER 1 M.M. X 45°
MACHINING FINISH IN MICRONS :–
▽ 8 – 25 ▽▽ 1.6 – 8
▽▽▽ 0.025 – 1.6 ▽▽▽▽ < 0.025

DEVIATION FOR NON TOLERANCED DIMENSIONS (IS –2102)

DIAMETERS & LENGTHS	
UPTO & INCL. 6	+0.1
6 – 30	+0.2
30 – 120	+0.3
120 – 315	+0.5
315 – 1000	+0.8
1000 – 2000	+1.2
2000 – 4000	+2.0
4000 & ABOVE	+3.0

LENGTH IN M.M. OF SHORTER SIDE OF ANGLE UPTO & INCL.	
1– 6	± 1°–00'
6– 30	± 0°–30'
30–120	± 0°–20'
120–400	± 0°–10'

SPP

TITLE: TRAY

MATERIAL: REF BOM
FINISH:
DRAWN: R.S
DRG.CHKD: C.P.K.
APPROVED: M.P.

SATISH DHAWAN SPACE CENTRE
SOLID PROPELLANT PLANT
I.S.R.O SRIHARIKOTA

PROJECTION

SCALE	DRG. NO.	DATE	SHEET
1 : 2.5	626-107-00-002-A3-R0	05.08.11	OF

REF. DRG. NO.
COM. FILE NO.

PART NO.	DESCRIPTION	MATERIAL	SPECIFICATION	QTY.
1	SHEET	ALLUMINUM	1530 x 25 x 10THK	01
2	PLATE	ALLUMINUM	ø500 x 10THK	01
3	PLATE	ALLUMINUM	1345 x 140 x 10THK	01
4	PLATE	ALLUMINUM	1345 x 90 x 10	02
5	PLATE	ALLUMINUM	145 x 25 x 10	04
6	ROUND	ALLUMINUM	ø75 x 100	01
7	HELICAL INSERT	STD	M36 x 55	01

REFER – *

SL NO.	ROUND (OD)	PLATE (ID)
1	$ø75^{0}_{-0.1}$	$ø75^{+0.1}_{0}$

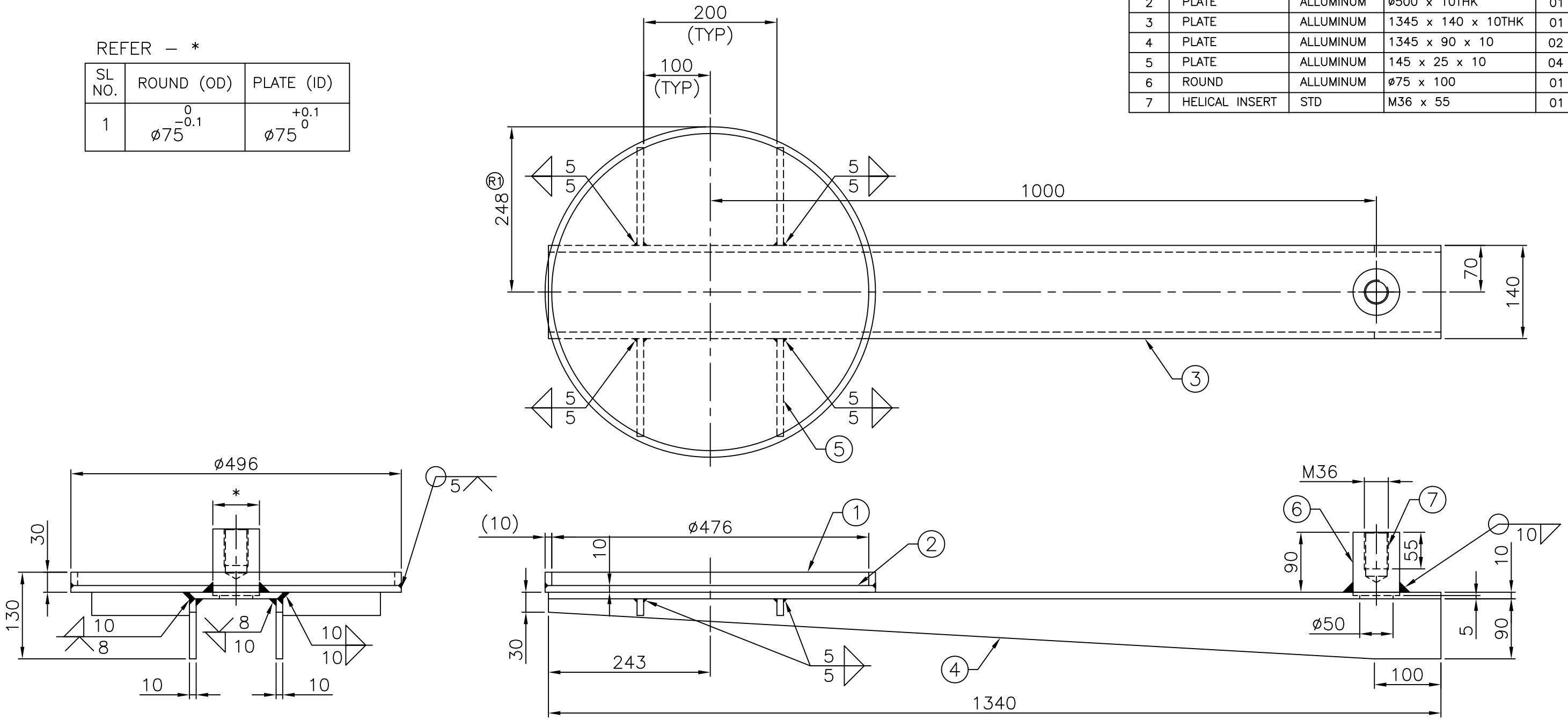

NOTES:

1. MATERIAL : REFER BOM
2. TO BE A WELDED CONSTRUCTION.
3. REMOVE ALL SHARP CORNERS AND BURRS.

DO NOT SCALE THE DRAWING
ASK IF IN DOUBT
UNLESS OTHERWISE SHOWN
ALL DIMENSIONS ARE IN MILLIMETERS
REMOVE SHARP EDGES & BURRS
CHAMFER 1 M.M. X 45°
MACHINING FINISH IN MICRONS :–
▽ 8 – 25 ▽▽ 1.6 – 8
▽▽▽ 0.025 – 1.6 ▽▽▽▽ < 0.025

DEVIATION FOR NON TOLERANCED DIMENSIONS (IS –2102)

DIAMETERS & LENGTHS	
UPTO & INCL. 6	+0.1
6 – 30	+0.2
30 – 120	+0.3
120 – 315	+0.5
315 – 1000	+0.8
1000 – 2000	+1.2
2000 – 4000	+2.0
4000 & ABOVE	+3.0

LENGTH IN M.M. OF SHORTER SIDE OF ANGLE UPTO & INCL.	
1– 6	± 1°–00'
6– 30	± 0°–30'
30–120	± 0°–20'
120–400	± 0°–10'

SPP

TITLE: ARM

MATERIAL: REF BOM
FINISH:
DRAWN: R.S
DRG.CHKD: C.P.K.
APPROVED: M.P.

SATISH DHAWAN SPACE CENTRE
SOLID PROPELLANT PLANT
I.S.R.O SRIHARIKOTA

PROJECTION

SCALE	DRG. NO.	DATE	SHEET
1 : 6	626-107-00-003-A3-R0	05.08.11	OF

REF. DRG. NO.
COM. FILE NO.

REF. DRG. NO.
COM. FILE NO.

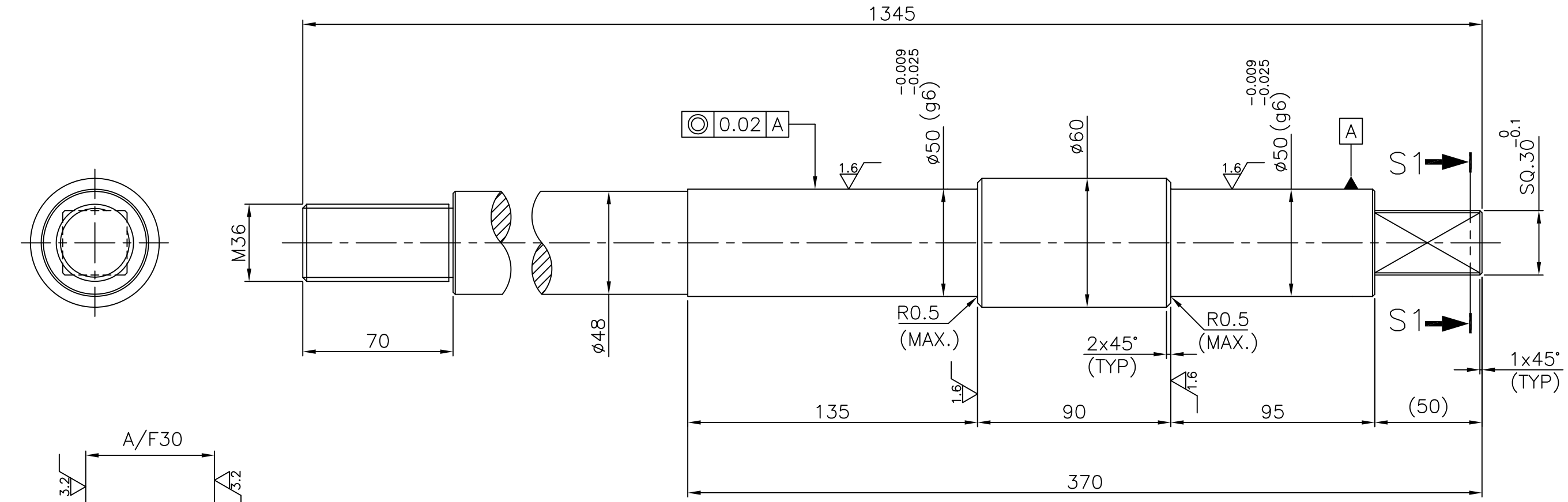

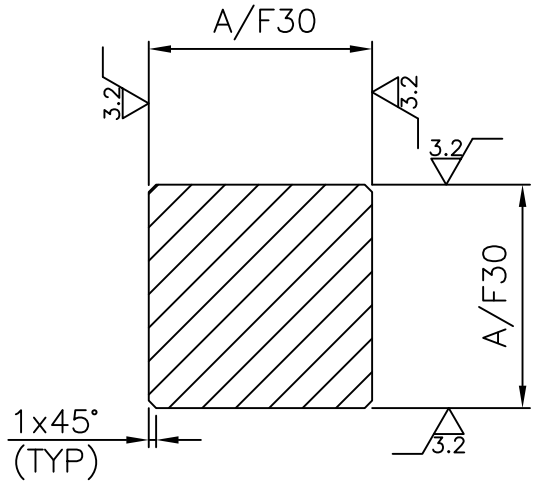

SECTION S1–S1

SCALE 1:1

NOTES:

1. REMOVE ALL SHARP CORNERS AND BURRS.

DO NOT SCALE THE DRAWING
ASK IF IN DOUBT
UNLESS OTHERWISE SHOWN
ALL DIMENSIONS ARE IN MILLIMETERS
REMOVE SHARP EDGES & BURRS
CHAMFER 1 M.M. X 45°
MACHINING FINISH IN MICRONS :–
▽ 8 – 25 ▽▽ 1.6 – 8
▽▽▽ 0.025 – 1.6 ▽▽▽▽ < 0.025

DEVIATION FOR NON TOLERANCED DIMENSIONS (IS –2102)

DIAMETERS & LENGTHS	
UPTO & INCL. 6	+0.1
6 – 30	+0.2
30 – 120	+0.3
120 – 315	+0.5
315 – 1000	+0.8
1000 – 2000	+1.2
2000 – 4000	+2.0
4000 & ABOVE	+3.0

LENGTH IN M.M. OF SHORTER SIDE OF ANGLE UPTO & INCL.	
1– 6	± 1°–0'
6– 30	± 0°–30'
30–120	± 0°–20'
120–400	± 0°–10'

SPP

MATERIAL:	SS 304 Ø65 x 1360
FINISH:	
DRAWN	R.S
DRG.CHKD	C.P.K.
APPROVED	M.P.

TITLE: SHAFT

SATISH DHAWAN SPACE CENTRE
SOLID PROPELLANT PLANT
I.S.R.O SRIHARIKOTA

PROJECTION

SCALE	DRG. NO.	DATE	SHEET
1 : 2	626-107-00-004-A3-R0	05.08.11	OF

PART NO.	DESCRIPTION	MATERIAL	SPECIFICATION	QTY.
1	ROUND	IS 2062 Gr–B	ø155 x 175	01
2	DISC	IS 2062 Gr–B	ø205 x 12	01

3.2 (1.6)

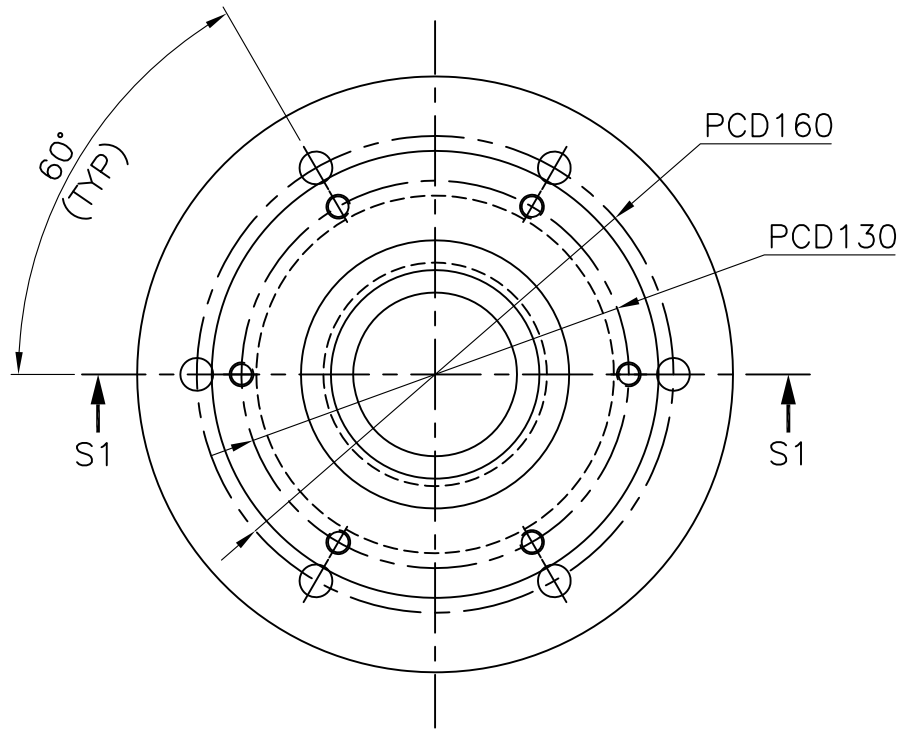

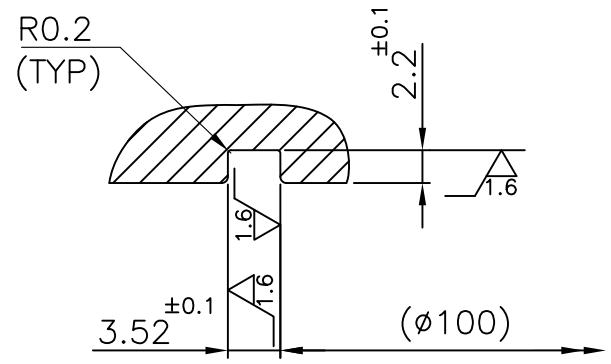

DETAIL D1
SCALE 2:1

REFER – *

SL NO.	ROUND (OD)	DISC (ID)
1	$ø75^{0}_{-0.1}$	$ø75^{+0.1}_{0}$

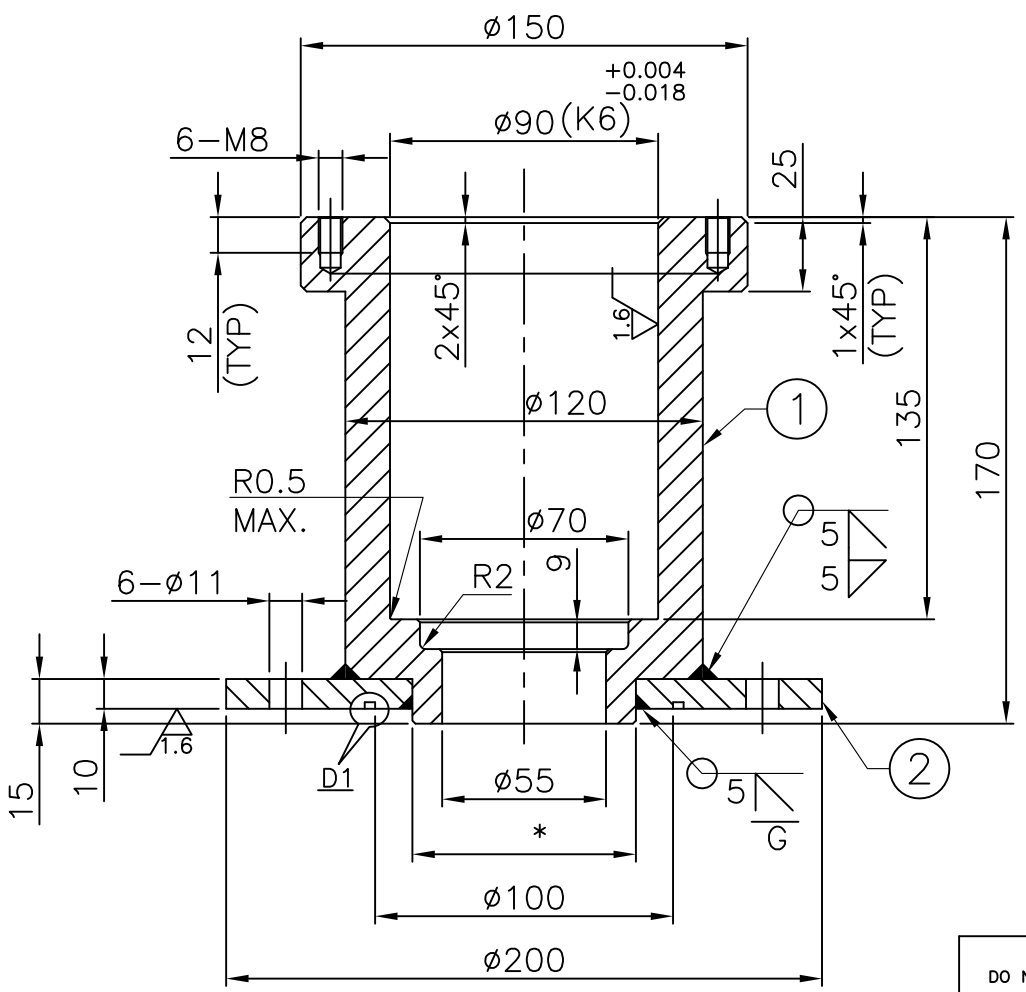

NOTES:

1. REMOVE ALL SHARP CORNERS AND BURRS.
2. TO BE A WELDED CONSTRUCTION.
3. REMOVE ALL SHARP CORNERS AND BURRS.

DO NOT SCALE THE DRAWING
ASK IF IN DOUBT
UNLESS OTHERWISE SHOWN
ALL DIMENSIONS ARE IN MILLIMETERS
REMOVE SHARP EDGES & BURRS
CHAMFER 1 M.M. X 45°
MACHINING FINISH IN MICRONS :–
▽ 8 – 25 ▽▽ 1.6 – 8
▽▽▽ 0.025 – 1.6 ▽▽▽▽ < 0.025

DEVIATION FOR NON TOLERANCED DIMENSIONS (IS –2102)

DIAMETERS & LENGTHS		LENGTH IN M.M. OF SHORTER SIDE OF ANGLE UPTO & INCL.
UPTO & INCL. 6	+0.1	1– 6 ± 1°–0'
6 – 30	+0.2	6– 30 ± 0°–30'
30 – 120	+0.3	30–120 ± 0°–20'
120 – 315	+0.5	120–400 ± 0°–10'
315 – 1000	+0.8	
1000 – 2000	+1.2	
2000 – 4000	+2.0	
4000 & ABOVE	+3.0	

SPP

TITLE: BEARING HOUSING

MATERIAL: REF BOM
FINISH: BLACKENING
DRAWN: R.S
DRG.CHKD: C.P.K.
APPROVED: M.P.

SATISH DHAWAN SPACE CENTRE
SOLID PROPELLANT PLANT
I.S.R.O SRIHARIKOTA

PROJECTION

SCALE	DRG. NO.	DATE	SHEET
1 : 2.5	626-107-00-005-A3-R0	05.08.11	OF

REF. DRG. NO.
COM. FILE NO.

PART NO.	DESCRIPTION	MATERIAL	SPECIFICATION	QTY.
1	ROUND	IS:2062 Gr–B	ø155 x 58	01
2	PLATE	IS:2062 Gr–B	225 x 180 x 16	01
3	PLATE	IS:2062 Gr–B	70 x 55 x 5	02
4	PLATE	IS:2062 Gr–B	55 x 35 x 5	02

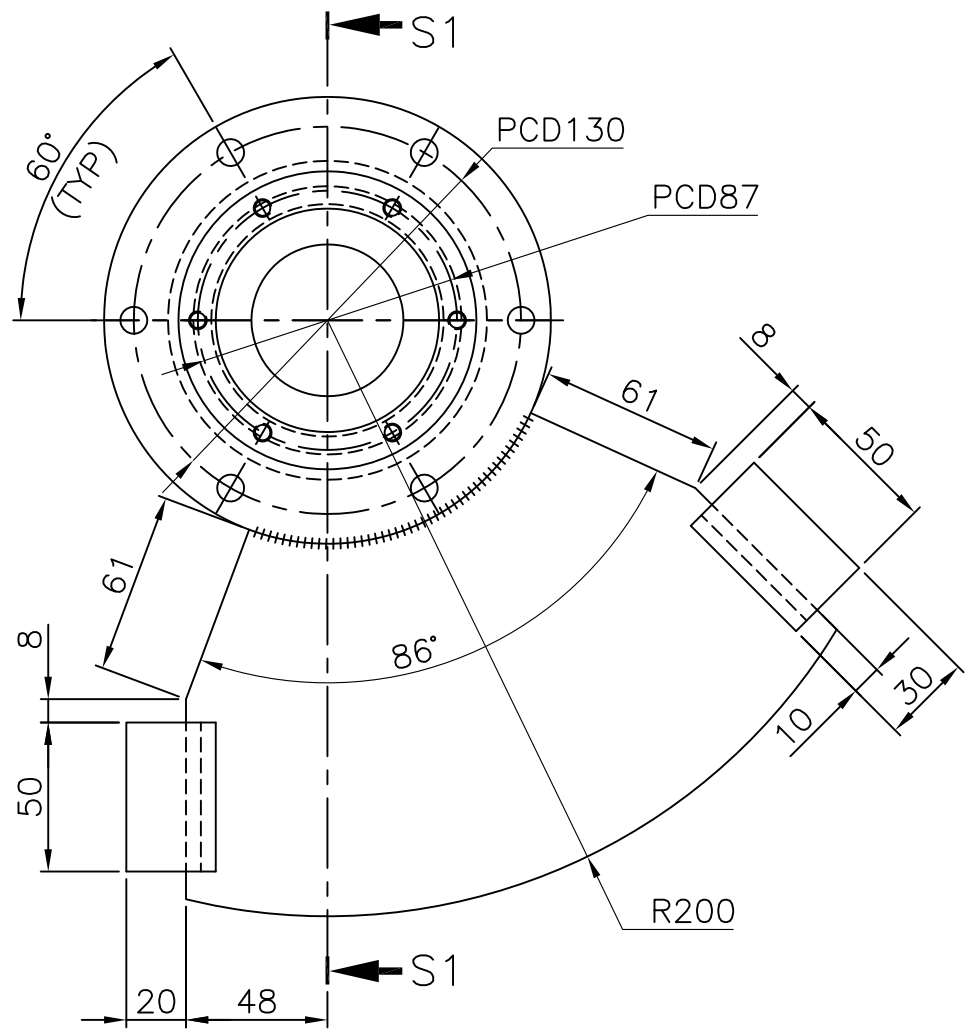

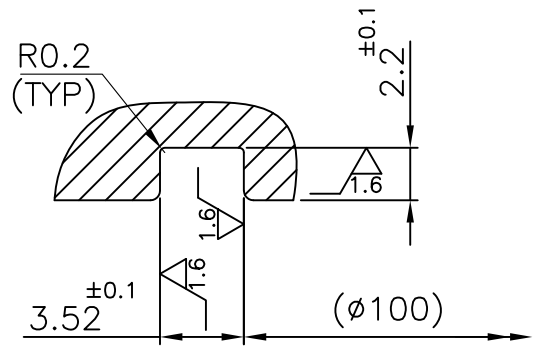

DETAIL D1
SCALE 2:1

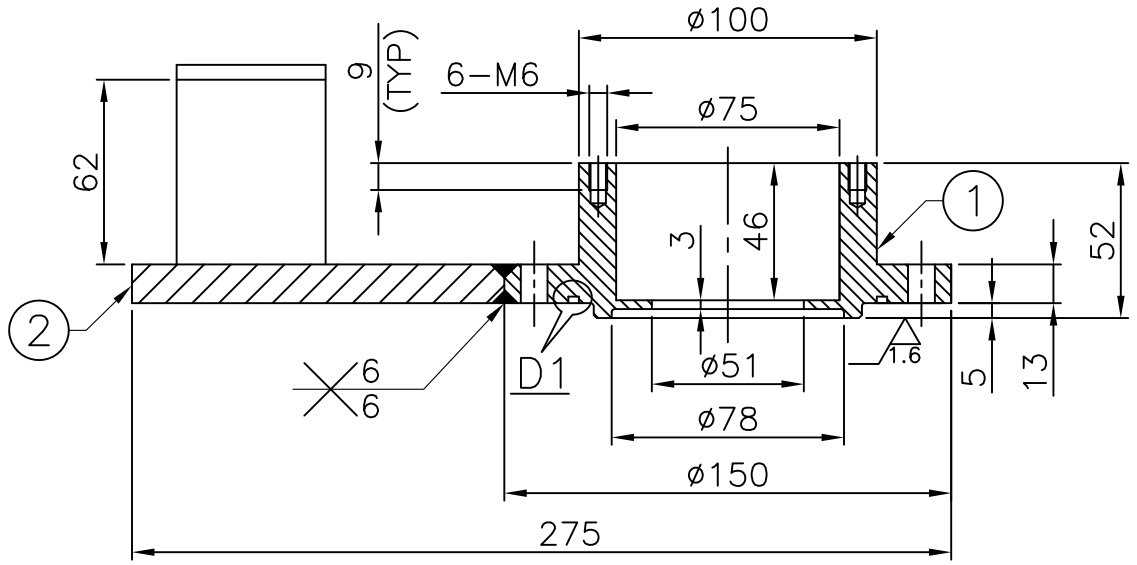

SECTION S1–S1

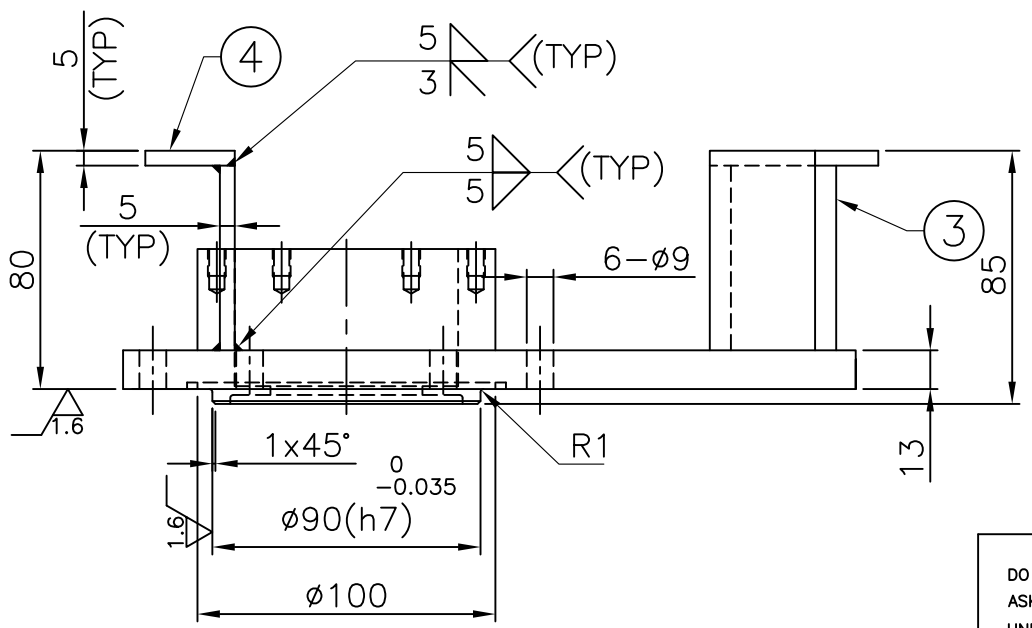

NOTES:

1. MATERIAL : REFER BOM
2. TO BE A WELDED CONSTRUCTION.
3. REMOVE ALL SHARP CORNERS AND BURRS.
4. DURING THE PAINTING PROCESS MACHINED SURFACE SHOULD BE MASKED.

DO NOT SCALE THE DRAWING
ASK IF IN DOUBT
UNLESS OTHERWISE SHOWN
ALL DIMENSIONS ARE IN MILLIMETERS
REMOVE SHARP EDGES & BURRS
CHAMFER 1 M.M. X 45°
MACHINING FINISH IN MICRONS :–
▽ 8 – 25 ▽▽ 1.6 – 8
▽▽▽ 0.025 – 1.6 ▽▽▽▽ < 0.025

DEVIATION FOR NON TOLERANCED DIMENSIONS (IS –2102)

DIAMETERS & LENGTHS	
UPTO & INCL. 6	+0.1
6 – 30	+0.2
30 – 120	+0.3
120 – 315	+0.5
315 – 1000	+0.8
1000 – 2000	+1.2
2000 – 4000	+2.0
4000 & ABOVE	+3.0

LENGTH IN M.M. OF SHORTER SIDE OF ANGLE UPTO & INCL.	
1– 6	± 1°–00′
6– 30	± 0°–30′
30–120	± 0°–20′
120–400	± 0°–10′

SPP

TITLE: STOPPER

MATERIAL: REF BOM
FINISH: PAINTING
DRAWN: R.S
DRG.CHKD: C.P.K.
APPROVED: M.P.

SATISH DHAWAN SPACE CENTRE
SOLID PROPELLANT PLANT
I.S.R.O SRIHARIKOTA

PROJECTION

SCALE	DRG. NO.	DATE	SHEET
1 : 2.5	626-107-00-006-A3-R0	05.08.11	OF

REF. DRG. NO.
COM. FILE NO.

PART NO.	DESCRIPTION	MATERIAL	SPECIFICATION	QTY.
1	PLATE	IS:2062 Gr–B	545x80x12	01
2	BOSS	IS:2062 Gr–B	ø80x35	01

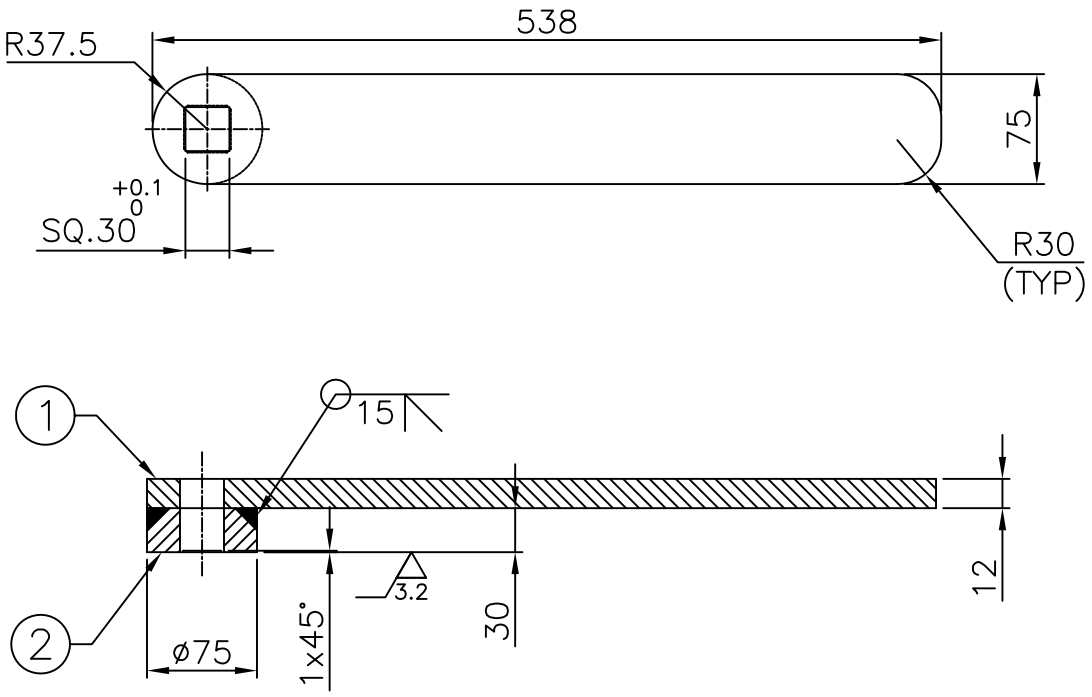

NOTES:

1. MATERIAL : REFER BOM
2. TO BE A WELDED CONSTRUCTION.
3. REMOVE ALL SHARP CORNERS AND BURRS.

DO NOT SCALE THE DRAWING
ASK IF IN DOUBT
UNLESS OTHERWISE SHOWN
ALL DIMENSIONS ARE IN MILLIMETERS
REMOVE SHARP EDGES & BURRS
CHAMFER 1 M.M. X 45°
MACHINING FINISH IN MICRONS :–
▽ 8 – 25 ▽▽ 1.6 – 8
▽▽▽ 0.025 – 1.6 ▽▽▽▽ < 0.025

DEVIATION FOR NON TOLERANCED DIMENSIONS (IS –2102)

DIAMETERS & LENGTHS	
UPTO & INCL. 6	+0.1
6 – 30	+0.2
30 – 120	+0.3
120 – 315	+0.5
315 – 1000	+0.8
1000 – 2000	+1.2
2000 – 4000	+2.0
4000 & ABOVE	+3.0

LENGTH IN M.M. OF SHORTER SIDE OF ANGLE UPTO & INCL.	
1– 6	± 1°–0'
6– 30	± 0°–30'
30–120	± 0°–20'
120–400	± 0°–10'

SPP

TITLE: LEVER

MATERIAL: REF BOM
FINISH: PAINTING
DRAWN: R.S
DRG.CHKD: C.P.K.
APPROVED: M.P.

SATISH DHAWAN SPACE CENTRE
SOLID PROPELLANT PLANT
I.S.R.O SRIHARIKOTA

PROJECTION

SCALE	DRG. NO.	DATE	SHEET
1 : 5	626-107-00-007-A4-R0	05.08.11	OF

REF. DRG. NO.
COM. FILE NO.

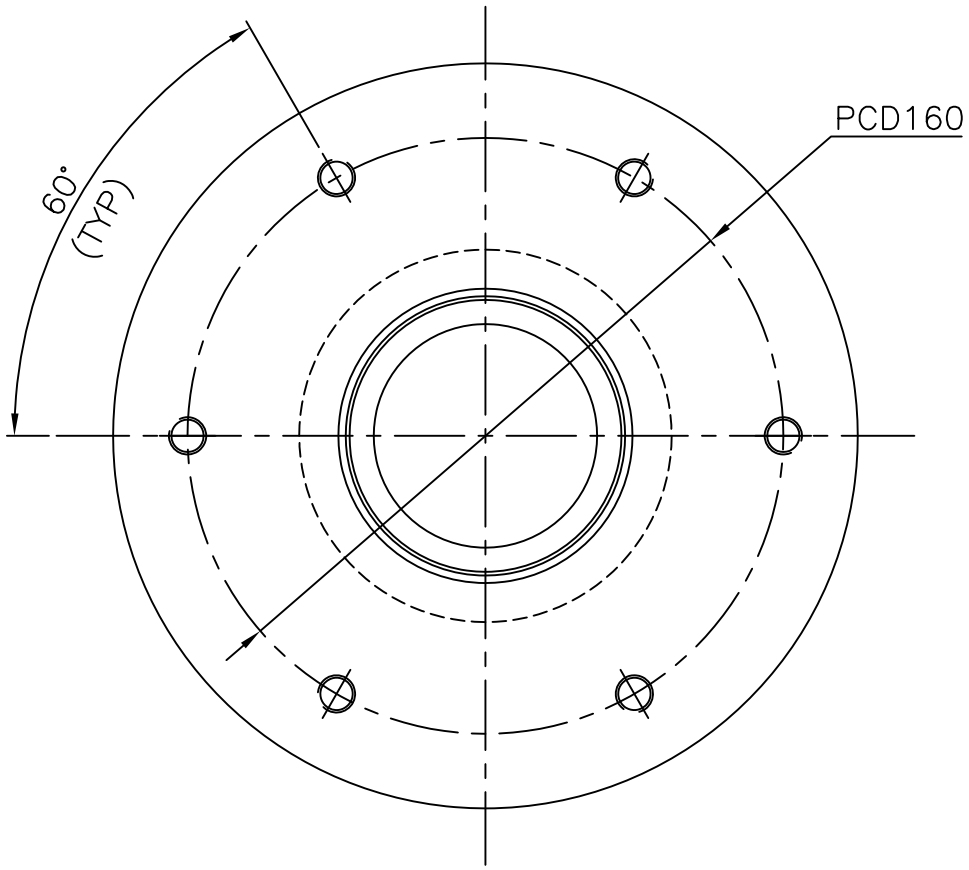

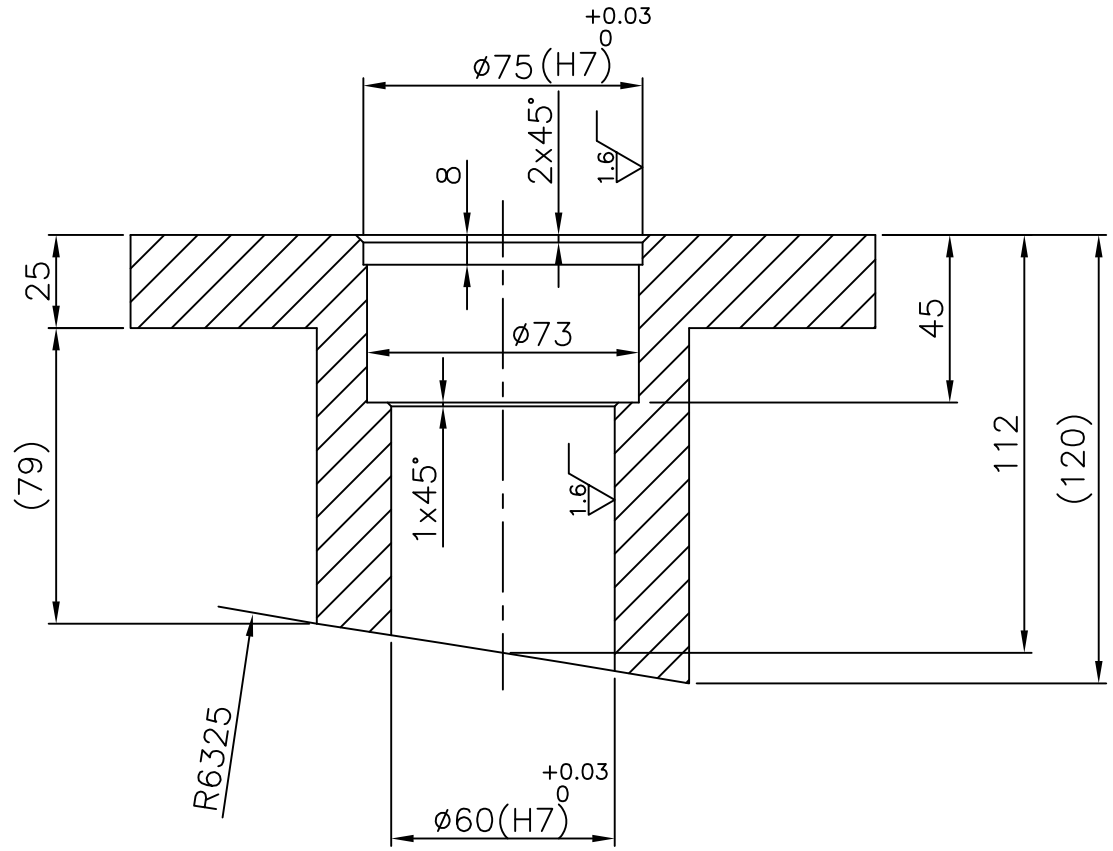

SECTION S1–S1

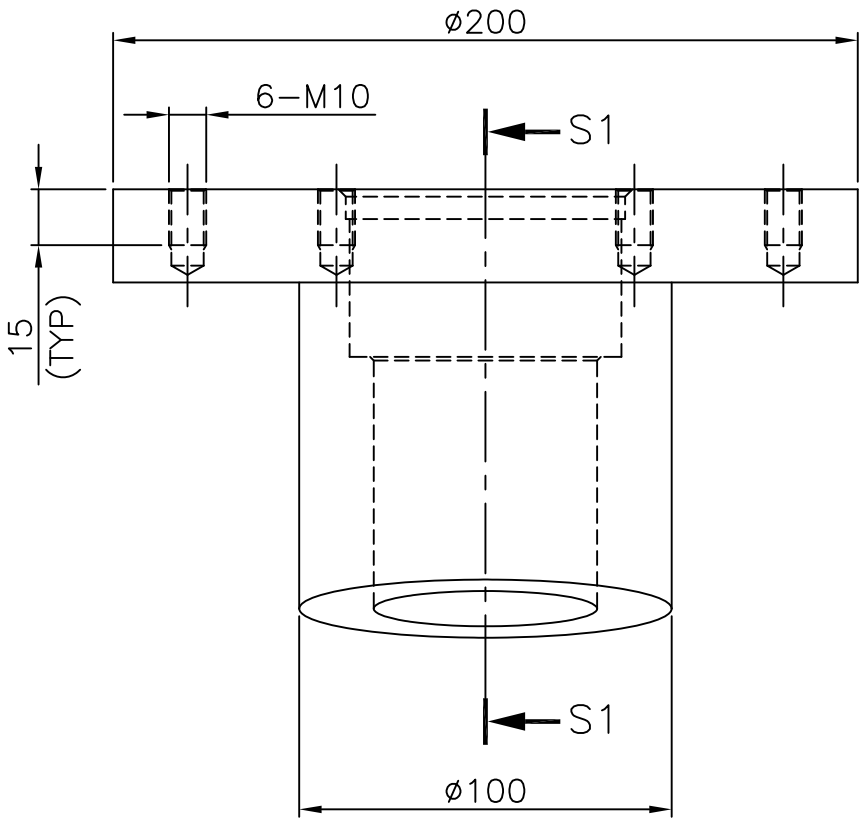

NOTES:

1. REMOVE ALL SHARP CORNERS AND BURRS.

DO NOT SCALE THE DRAWING
ASK IF IN DOUBT
UNLESS OTHERWISE SHOWN
ALL DIMENSIONS ARE IN MILLIMETERS
REMOVE SHARP EDGES & BURRS
CHAMFER 1 M.M. X 45°
MACHINING FINISH IN MICRONS :–
▽ 8 – 25 ▽▽ 1.6 – 8
▽▽▽ 0.025 – 1.6 ▽▽▽▽ < 0.025

DEVIATION FOR NON TOLERANCED DIMENSIONS (IS –2102)

DIAMETERS & LENGTHS	
UPTO & INCL. 6	+0.1
6 – 30	+0.2
30 – 120	+0.3
120 – 315	+0.5
315 – 1000	+0.8
1000 – 2000	+1.2
2000 – 4000	+2.0
4000 & ABOVE	+3.0

LENGTH IN M.M. OF SHORTER SIDE OF ANGLE UPTO & INCL.	
1– 6	± 1°–00'
6– 30	± 0°–30'
30–120	± 0°–20'
120–400	± 0°–10'

SPP

MATERIAL:	IS: 2062 Gr-B Ø 205 x 125
FINISH:	BLACKENING
DRAWN	R.S
DRG.CHKD	C.P.K.
APPROVED	M.P.

TITLE: SEAL HOUSING

SATISH DHAWAN SPACE CENTRE
SOLID PROPELLANT PLANT
I.S.R.O SRIHARIKOTA

PROJECTION

SCALE	DRG. NO.	DATE	SHEET
1 : 2	626-107-00-008-A3-R0	05.08.11	OF

REF. DRG. NO.
COM. FILE NO.

REF. DRG. NO.
COM. FILE NO.

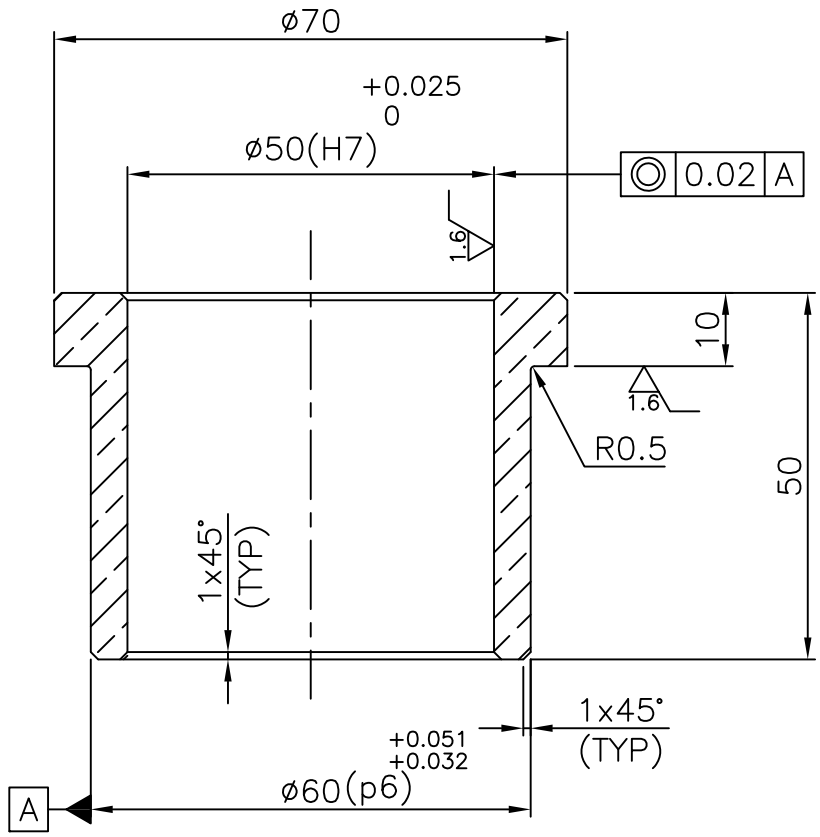

NOTES:

1. REMOVE ALL SHARP CORNERS AND BURRS.

DO NOT SCALE THE DRAWING
ASK IF IN DOUBT
UNLESS OTHERWISE SHOWN
ALL DIMENSIONS ARE IN MILLIMETERS
REMOVE SHARP EDGES & BURRS
CHAMFER 1 M.M. X 45°
MACHINING FINISH IN MICRONS :-
▽ 8 – 25 ▽▽ 1.6 – 8
▽▽▽ 0.025 – 1.6 ▽▽▽▽ < 0.025

DEVIATION FOR NON TOLERANCED DIMENSIONS (IS –2102)

DIAMETERS & LENGTHS	
UPTO & INCL. 6	+0.1
6 – 30	+0.2
30 – 120	+0.3
120 – 315	+0.5
315 – 1000	+0.8
1000 – 2000	+1.2
2000 – 4000	+2.0
4000 & ABOVE	+3.0

LENGTH IN M.M. OF SHORTER SIDE OF ANGLE UPTO & INCL.	
1– 6	± 1°–0'
6– 30	± 0°–30'
30–120	± 0°–20'
120–400	± 0°–10'

SPP

MATERIAL: Ø 75 x 55 PHOSPHORUS BRONZE
FINISH:

DRAWN	R.S
DRG.CHKD	C.P.K.
APPROVED	M.P.

TITLE: BUSH

SATISH DHAWAN SPACE CENTRE
SOLID PROPELLANT PLANT
I.S.R.O SRIHARIKOTA

SCALE	DRG. NO.	DATE	SHEET
1 : 1	626-107-00-009-A4-R0	05.08.11	OF

PROJECTION

REF. DRG. NO.
COM. FILE NO.

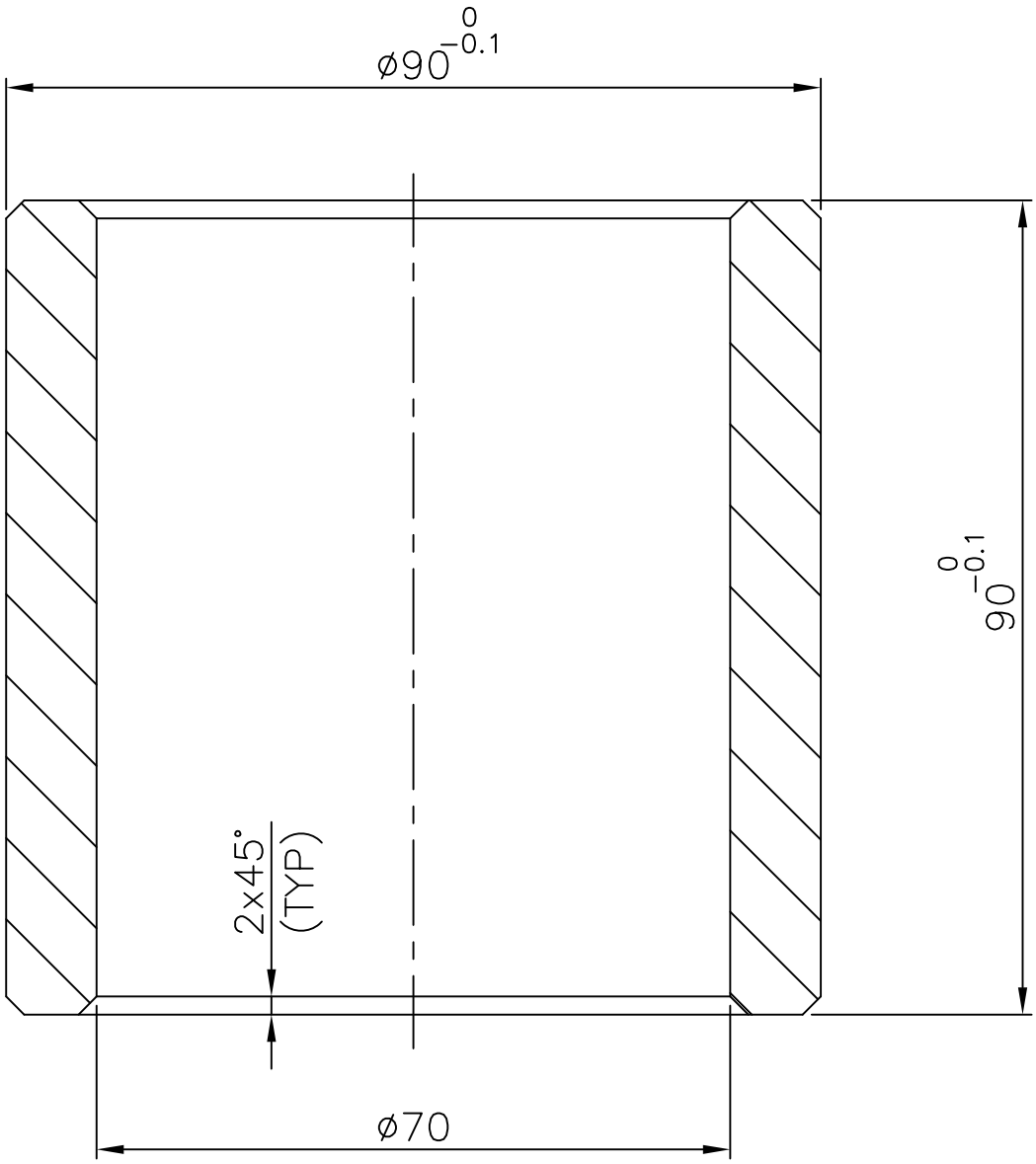

NOTES:

1. REMOVE ALL SHARP CORNERS AND BURRS.

DO NOT SCALE THE DRAWING
ASK IF IN DOUBT
UNLESS OTHERWISE SHOWN
ALL DIMENSIONS ARE IN MILLIMETERS
REMOVE SHARP EDGES & BURRS
CHAMFER 1 M.M. X 45°
MACHINING FINISH IN MICRONS :–
▽ 8 – 25 ▽▽ 1.6 – 8
▽▽▽ 0.025 – 1.6 ▽▽▽▽ < 0.025

DEVIATION FOR NON TOLERANCED DIMENSIONS (IS –2102)

DIAMETERS & LENGTHS	
UPTO & INCL. 6	+0.1
6 – 30	+0.2
30 – 120	+0.3
120 – 315	+0.5
315 – 1000	+0.8
1000 – 2000	+1.2
2000 – 4000	+2.0
4000 & ABOVE	+3.0

LENGTH IN M.M. OF SHORTER SIDE OF ANGLE UPTO & INCL.	
1– 6	± 1°–0′
6– 30	± 0°–30′
30–120	± 0°–20′
120–400	± 0°–10′

SPP

MATERIAL:	IS: 2062 Gr. B Ø 100 x 95
FINISH:	BLACKENING
DRAWN	R.S
DRG.CHKD	C.P.K.
APPROVED	M.P.

TITLE: SPACER

SATISH DHAWAN SPACE CENTRE
SOLID PROPELLANT PLANT
I.S.R.O SRIHARIKOTA

SCALE	DRG. NO.	DATE	PROJECTION
1 : 1	626-107-00-010-A4-R0	05.08.11	SHEET OF

REF. DRG. NO.
COM. FILE NO.

3.2 (1.6)

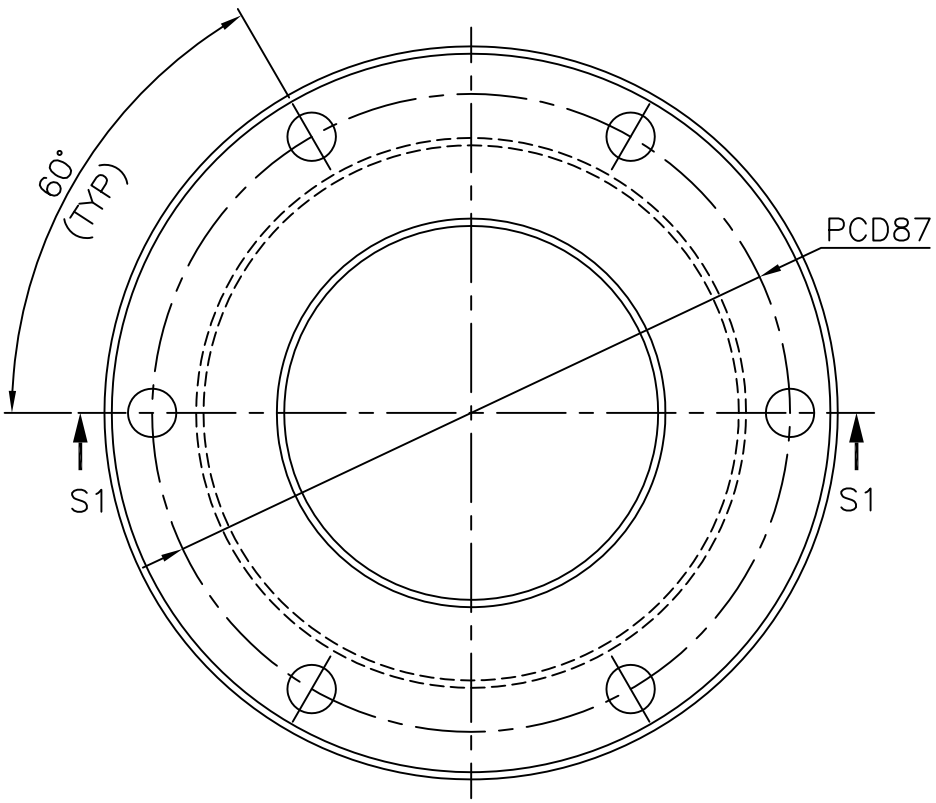

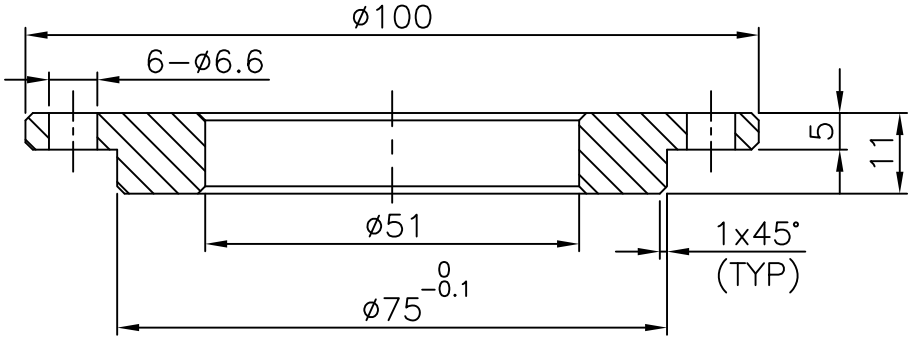

SECTION S1–S1

NOTES:

1. REMOVE ALL SHARP CORNERS AND BURRS.

DO NOT SCALE THE DRAWING
ASK IF IN DOUBT
UNLESS OTHERWISE SHOWN
ALL DIMENSIONS ARE IN MILLIMETERS
REMOVE SHARP EDGES & BURRS
CHAMFER 1 M.M. X 45°
MACHINING FINISH IN MICRONS :–
▽ 8 – 25 ▽▽ 1.6 – 8
▽▽▽ 0.025 – 1.6 ▽▽▽▽ < 0.025

DEVIATION FOR NON TOLERANCED DIMENSIONS (IS –2102)

DIAMETERS & LENGTHS	
UPTO & INCL. 6	+0.1
6 – 30	+0.2
30 – 120	+0.3
120 – 315	+0.5
315 – 1000	+0.8
1000 – 2000	+1.2
2000 – 4000	+2.0
4000 & ABOVE	+3.0

LENGTH IN M.M. OF SHORTER SIDE OF ANGLE UPTO & INCL.	
1– 6	± 1°–0′
6– 30	± 0°–30′
30–120	± 0°–20′
120–400	± 0°–10′

SPP

TITLE: SEAL COVER

MATERIAL: IS: 2062 Gr. B Ø 105 x 15
FINISH: PAINTING
DRAWN: R.S
DRG.CHKD: C.P.K.
APPROVED: M.P.

SATISH DHAWAN SPACE CENTRE
SOLID PROPELLANT PLANT
I.S.R.O SRIHARIKOTA

PROJECTION

SCALE	DRG. NO.	DATE	SHEET
1 : 1	626-107-00-011-A4-R0	05.08.11	OF

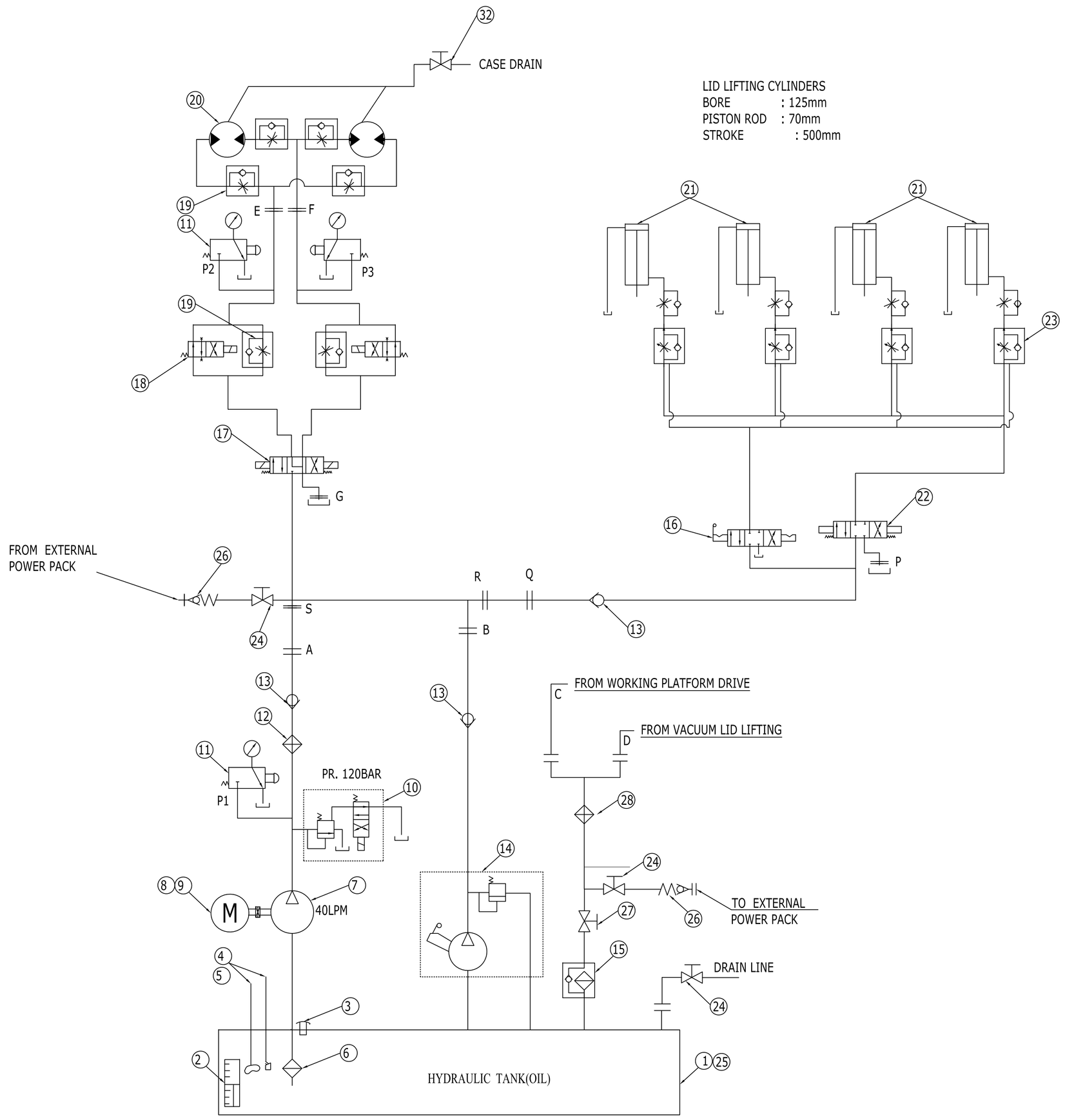

Part No	DESCRIPTION	MAKE	SPECIFICATION	QTY
1	OIL TANK	---	200 LTR	1
2	OIL LEVEL GUAGE	HYDROLINE	---	1
3	AIR BREATHER	ARGO HYTAUS	---	1
4	TEMP. TRANSMITTER	As per tender	---	1
5	FLOAT SWITCH WITH TWO CHANGE OVER CONTACTS	As per Tender	---	2
6	SUCTION STRAINER	AS PER TENDER	---	1
7	GEAR PUMP	PARKER	PGP 517 AD190C M2NH2L3L2B1	1
8	COUPLING	HYDEX	---	1
9	ELECTRICAL MOTOR	AS PER TENDER	---	1
10	RELIEF VALVE WITH VENTING DC VALVE	PARKER	RAH 101 S30, DIV W2K NJW 75 PARKER	1
11	SINGLE STAGE GAUGE ISOLATOR	HYLOC	---	3
12	PRESSURE LINE FILTER	PARKER	15P210QM2 50 MM195	1
13	CHECK VALVE		9C800S	3+2
14	HAND PUMP WITH RELIEF VALVE	PARKER	910R-06D2BC	1
15	RETURN LINE FILTER WITH VISUAL INDICATOR	PARKER	FTB2A10QV25S16X	1
16	LEVER OPERATED DETENTEC 3 POSITION DC VALVE	PARKER	D1DL1 NN 77	1
17	3 POSITION DIRECTION CONTROLE VALVE	PARKER	D1VW 4C NJEE 75	1
18	2 POSITION DIRECTION CONTROLE VALVE	PARKER	DIVW 20B NJEE 75	2
19	FLOW REGULATOR WITH BUILT IN CHECK VALVE	PARKER	9F 800 S	10 + 5
20	HYDRAULIC MOTOR	PARKER	MR 250 DN1N1C1NXX	1
21	HYD. CYLINDER	PARKER	125 JJ HMI RN34MC500M 1144	4
22	3 POSITION DIRECTION CONTROL VALVE	PARKER	D1VW 4C NJEE 75	1
23	LOAD COMPANCATED VALVE	HERION	MRU6HG3001100	4+1
24	BALL VALVE	PARKER	DN 15 $\frac{1}{2}$" BSP	4 + 4
25	TEMP. TRANSMITER	Radix	---	1+1
26	$\frac{1}{2}$" SS QCDC	PARKER	FS-501-8FP	2+2
27	BALL VALVE	PARKER	DN 25 1" BSP	1+1
--	MINIMESS COUPLING	PARKER	EMA3/ 1 /4ED	2
--	MINIMESS TESTING HOSE	PARKER	SMA3-1500X	2
28	AIR COOLER	TENDER	---	1

Note:– Extra quantity mentioned in this circuit shall be supplied.

Valve Panel shall be mounted in the system.

Oil System Servo 68

DO NOT SCALE THE DRAWING
ASK IF IN DOUBT
UNLESS OTHERWISE SHOWN
ALL DIMENSIONS ARE IN MILLIMETERS
REMOVE SHARP EDGES & BURRS
CHAMFER 1 M.M. X 45°
MACHINING FINISH IN MICRONS :–
▽ 8 – 25 ▽▽ 1.6 – 8
▽▽▽ 0.025 – 1.6 ▽▽▽▽ < 0.025

DEVIATION FOR NON TOLERANCED DIMENSIONS (IS –2102)

DIAMETERS & LENGTHS	
UPTO & INCL. 6	+0.1
6 – 30	+0.2
30 – 120	+0.3
120 – 315	+0.5
315 – 1000	+0.8
1000 – 2000	+1.2
2000 – 4000	+2.0
4000 & ABOVE	+3.0

LENGTH IN M.M. OF SHORTER SIDE OF ANGLE UPTO & INCL.	
1– 6	± 1°–00'
6– 30	± 0°–30'
30–120	± 0°–20'
120–400	± 0°–10'

SPP

TITLE HYDRAULIC CIRCUIT FOR WORKING PLATFORM 2ND CASTING FACILITY

SATISH DHAWAN SPACE CENTRE
SOLID PROPELLANT PLANT
I.S.R.O SRIHARIKOTA

MATERIAL:
FINISH:
DRAWN
DRG.CHKD
APPROVED
SCALE
DRG. NO.
DATE
PROJECTION
SHEET
OF

REF. DRG. NO.
COM. FILE NO.

Page Destination: Tender Header **Format Type :** Normal

. :

GOVERNMENT OF INDIA

DEPARTMENT OF SPACE

SATISH DHAWAN SPACE CENTRE

PURCHASE DIVISION

Tele No.08623-225023/225174/225127
Fax No.08623-225170/22-5028
e-Mail ID : hps@shar.gov.in, hasan@shar.gov.in, sselvan@shar.gov.in

STANDARD TERMS & CONDITIONS

1.OFFERS SHALL BE SENT ONLINE ONLY USING STANDARD DIGITAL SIGNATURE CERTIFICATE OF CLASS III WITH ENCRYPTION / DECRYPTION. THE TENDERS AUTHORISED ONLINE ON OR BEFORE THE OPEN AUTHORISATION DATE AND TIME ONLY WILL BE CONSIDERED AS VALID TENDERS EVEN THOUGH THE BIDS ARE SUBMITTED ONLINE.

2.THE TENDERER MUST AUTHORISE BID OPENING WITHIN THE TIME STIPULATED IN THE SCHEDULE BY SDSC SHAR. OTHERWISE THE ONLINE BID SUBMITTED WILL NOT BE CONSIDERED FOR EVALUATION. PHYSICAL COPY WILL NOT BE CONSIDERED EVEN THOUGH IT IS RECEIVED BEFORE THE BID SUBMISSION DATE.

In case of two-part tenders, parties shall submit their offers as follows:-

1) Part-I – Techno-commercial Bid

(No price details shall be mentioned in this bid and shall not upload the details of price along with the techno-commercial bid)

2) Part-II – Price Bid

In view of Two Part Tender, the Offers submitted contrary to above instructions will be summarily rejected.

3.In case, the tenderer is not interested to participate in the tender, the tenderer shall submit regret letter giving reasons, failing which future enquiries will not be sent.

4.**Offer Validity:** The validity of the offers / tenders should be 90 days (in case of single part tender) and 120 days (in case two part tender) from the date of opening of the tenders. Tenders with offer validity less than the period mentioned above, will not be considered for evaluation.

5.**Excise Duty** - SDSC-SHAR is eligible for Excise Duty Exemption under Notification No. 64/95 dated 16.03.1995 as amended by Notification No. 15/2007 dated 01.03.2007 and as amended by Notification No. 07/2008 dated 01.03.2008 and necessary Exemption Certificate will be provided. No claim, whatsoever, for payment of Excise Duty or Cenvat reversal will be allowed later. The suppliers have to take this into account while submitting quotations.

Excise Duty Exemption Certificte will be issued only to finished product as per the PO/Contract. EDEC shall not be issued in favour of third parties for raw materials, other components that go in to the manufacture of the end product.

Excise Duty Exemption Certificate will be issued in favour of original equipment manufacturer provided (i) the tender has been received from the sole selling agent of OEM concerned (for which documentary proof shall be produced) and (ii) a request for issue of Excise Duty Exemption Certificate was made in the original offer itself.

6.**CST** - With effect from 01.04.2007, Form-D has been withdrawn for Inter-State purchases by Government Departments. Now the percentage of CST on the Inter-State sales to Government Departments shall be the percentage of VAT/State Sales Tax as applicable in the State of the Seller/Dealer. Accordingly, the suppliers have to indicate clearly the % (full rate of tax) of CST applicable against each item in their offers.

7.**Customs Duty** - SDSC-SHAR is eligible for 100% Customs Duty exemption as per Notification No. 12/2012 dated 17.03.2012. This may be taken into account while quoting for import items, if any.

In case tenderers offering items considering customs duty exemption, they should also indicate the bill of materials and price, separately, with Customs Duty component and terms and conditions thereto.

8.**Advance Payment** - Wherever advance payment is requested, Bank Guarantee from any Nationalized Bank/Scheduled Bank should be furnished. In case of advance payments, if the party is not supplying the material within the delivery schedule, interest will be levied as per the Prime Lending Rate of RBI plus 2% penal interest.

Interest will be loaded for advance payments/stage payments as per the prime lending rate of RBI and will be added to the landed cost for comparison purpose. In case of different milestone payments submitted by the parties, a standard and transparent methodology like NPV will be adopted for evaluating the offers.

9.**Liquidated Damages** - In all cases, delivery schedule indicated in the Purchase Order/Contract is the essence of the contract and if the party fails to deliver the material within the delivery schedule, Liquidated Damages will be levied @ 0.5% per week or part thereof subject to a maximum of 10% of total order value.

10.**Performance Bank Guarantee** - Performance Bank Guarantee for 10% of the order value should be furnished in the form of Bank Guarantee from nationalized/scheduled bank or by Demand Draft valid till warranty period plus sixty days as claim period.

11.**Security Deposit** – Security Deposit for 10% of the order value is mandatory, if the ordered value is Rs.5.00 lakhs and above. Party

shall furnish the Security Deposit in the form of Bank Guarantee from nationalized/scheduled bank or by Demand Draft valid till completion of the contract period plus sixty days towards claim period for faithful execution of the contract.

12.**BANK GUARANTEE FOR FIM:** Supplier has to submit Bank guarantee for equal value of Free Issue of Materials (FIM) issued by the Department from Nationalised / Scheduled Bank valid till receipt and acceptance of supply and satisfactory accounting of FIM plus sixty days as claim period.

13.The delivery period mentioned in the tender enquiry, IF ANY, is with the stipulation that no credit will be given for earlier deliveries and offers with delivery beyond the period will be treated as unresponsive.

14.The Department will have the option to consider more than one source of supply and final orders will be given accordingly.

15.The bidders should note that conditional discounts would not have edge in the evaluation process of tenders.

16.Non-acceptance of any conditions wherever called for related to Guarantee/ Warranty, Performance Bank Guarantee, Security Deposit, Liquidated damages are liable for disqualification.

17.Wherever installation/ commissioning involved, the guarantee/warrantee period shall reckon only from the date of installation and commissioning.

18.Purchase/Price Preference will be extended to the MSMEs under the Public Procurement Policy for MSMEs formulated under the Micro, Small and Medium Enterprises Development Act, 2006 and instructions issued by Government of India from time to time. Vendors who would like to avail the benefit of MSME should clearly mention the same and submit all the documentary evidences to substantiate their claim along with tender itself.

19.The drawings, specifications, end use etc., given by the Centre/Unit along with the tender enquiry are confidential and shall not be disclosed to any third party.

20.**SPECIAL CONDITIONS FOR SUBMITTING QUOTATIONS IN FOREIGN CURRENCY BY THE INDIAN AGENTS**

The Tenderer should submit the following documents/information while quoting:-

a)Foreign Principal's proforma invoice/quote indicating the commission payable to the Indian Agent and nature of after sales service to be rendered by the Indian Agent.

b)Copy of Agency agreement with the Foreign Principal and the Indian Agent, precise relationship between them and their mutual interest in the business.

c)Registration and item empanelment of the Indian Agent.

d)Agency Commission will be paid only Indian Currency.

e)Compliance of the tax laws by the Indian Agent.

21. **High Sea Sales**- Against High Sea Sale transactions:

a.Offers shall be on all inclusive basis including delivery upto Sriharikota at the risk and cost of the supplier. Customs Clearance is the responsibility of the supplier and at his cost and risk.

b.100% payment will be made within 30 days after receipt and acceptance of the items at our site.

c.Sales Tax is not applicable

d.Customs Duty Exemption Certificate and other relevant documents required for Customs clearance will be provided.

e.High Sea Sales Agreement furnished by the supplier in accordance with the terms and conditions of our purchase order will be signed and issued by SDSC-SHAR.

22.The following information/ documents are to be submitted wherever applicable.

1.Product Literature

2.Core banking account number of SBI, RTGS Details

3.PAN No. in quotation and invoices

4.Excise Duty, VAT, Service Tax Registration details.

5.In case of MSME, registration details / documents from Competent Authority.

23.**EXCLUSION OF TENDERS**

The following tenders shall be summarily rejected from the procurement process

a.Tenders received from vendors who have not qualified in terms of their registration.

b.Tenders received against publishing of a limited tender in the CPP portal.

c.Tenders of vendors who have been removed from the vendor list or banned/debarred from having business dealings.

d.Unsolicited tenders from vendors.

e.The tenders which materially depart from the requirements specified in the tender document or which contain false information.

f.The tenders which are not accompanied by the prescribed Earnest Money Deposit.

g.The tenders of vendors who have not agreed to furnish Security Deposit, Performance Bank Guarantee and Liquidated Damages.

h.The validity of the tenders is shorter than the period specified in the tender enquiry.

i.The tenders received from vendors or their agents or anyone acting on their behalf, who have promised or given to any official of the Centre/Unit/Department, a gratification in any form, or anything of value, so as to unduly influence the procurement process.

j.The tenders received from vendors, who, in the opinion of the Centre/Unit, have a conflict of interest materially affecting fair competition.

k.The tenders received from Indian agents on behalf of their foreign Principals/OEMs (in cases where the Principals/OEMs also submit their tenders simultaneously for the same item/product in the same tender).

l.In case two or more tenders are received from an Indian agent on behalf of more than one foreign Principal/OEM, in the same tender for the same item/product.

m.If a firm quotes 'NIL' charges / consideration, the bid shall be treated as un-responsive and will not be considered.